epur

User's Manual

OAKBOT EOX series 4.2

Original Manual

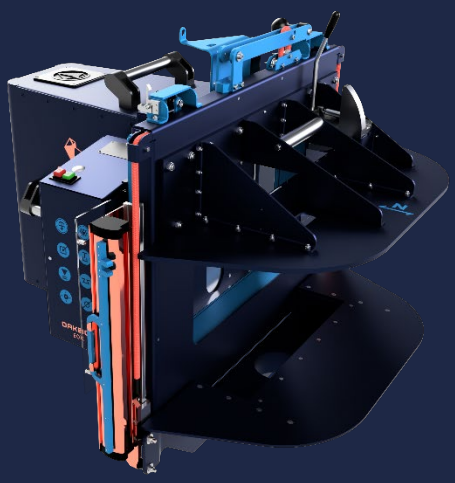

Contents

Introduction

Thank you for purchasing an EPUR OAKBOT digital milling machine.

In order to ensure use in optimum conditions, get the best results possible and be familiar with safety measures, **please familiarize yourself with this manual from A to Z.**

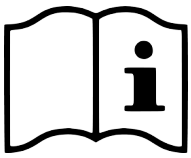

/!\ CAUTION /!

Read this manual in its entirety before beginning to use the OAKBOT.

Please read the instructions for use and warnings carefully so as to use your digital milling machine in complete safety.

After-Sales Service

You can contact the After-Sales Service:

by e-mail at the following address:

support@epur.io

by surface mail at the following address:

EPUR SAS

Hameau de Caillens - 11140 - Rodome - France

or by telephone at: **+33(0)4 68 31 29 11**

The photographs in this manual are not contractually binding.

General conditions of use and important warnings

/!\ CAUTION /!

Respecting the following precautions is essential. Failure to comply with this may result in irreversible material damage to the product and/or its environment and cause serious bodily injury, risk of fire and/or death. These precautions are not exhaustive and in no way substitute the elementary rules of safety concerning an item of professional equipment intended for machining work.

- The machine has inbuilt safety systems. Do not remove them and see that they stay in place and remain in good working order.
- For your own safety, wearing personal protective equipment is mandatory. This includes ear defenders, protective eyewear and safety footwear. Wear suitable clothing when using the machine.
- Never carry out any work on the milling machine or insert anything, when it is powered up or operating, as this would risk causing serious injury.
- Do not place anything on your milling machine, either externally or internally, keep it clean and clear it regularly of all deposits and waste resulting from machining operations. Do not use alcohol-based cleaning products or solvents for cleaning your machine.
- Machine just wood. Any other material machined using the OAKBOT would release the EPUR SAS Company from all liability in the event of damage to people or property.

- Only use milling tools supplied by EPUR with the OAKBOT.
- Do not cover your milling machine during operations as this might lead to overheating.
- Connect the control unit to the milling machine via the dedicated cable.
- Connect your milling machine to the power supply with the cable supplied to a suitable socket and check the status of the power supply cable. A single, direct connection is preferable to accumulating with other plugs.
- Do not use the machine in a dangerous environment, as it is an electrically-powered system. It must be connected to the mains power supply or an electrical generator. It runs on 220 volts. Do not use in damp places or places exposed to rain.
- Do not use or leave electrical tools near flammable liquids or in gaseous or explosive atmospheres. The motors may generate sparks and catch fire.
- When changing accessories, only use those tools that we have supplied for this purpose.
- Do not force tools or accessories if they do not work properly, as it is certain that there is a problem. Check out what could be causing this.
- It is prohibited to disassemble and/or modify your digital milling machine. Any part that has been disassembled or modified will no longer be covered by the manufacturer's warranty, unless the latter expressly agrees to such.
- When changing milling cutters and before using again, check that you have removed any tool, spanner or similar items from the machine and its area of use.
- Before starting up the Oakbot, check that any object in the machining zone is removed that might come into collision with the milling cutter and possibly injure the operator, disrupt your machine or even seriously damage it.
- Place your milling machine on stable wooden blocks that can take its weight. Vibrations from the milling machine may unbalance any inadequate support and cause the unit to fall over, which may result in serious injuries and damage to machine and environment, and possibly cause fires.
- Use the clamping system as recommended in this manual and do not use in any other way. Poor clamping may lead to the machine falling over, causing serious injuries and damage to the system and its environment.

- The machine must be kept under supervision during the first few seconds of the milling process. If clamping is not properly ensured, this often leads to uncoupling at the beginning of the machining process.
- Wait for the machine and the spindle to stop completely before handling workpieces or the machine.
- The OAKBOT which comes with its clamping system and handling trolley is a unit. No machining must be carried out or movement made without the robot being engaged on the clamping system and suspended on its trolley.

Items Supplied

Clamping Module

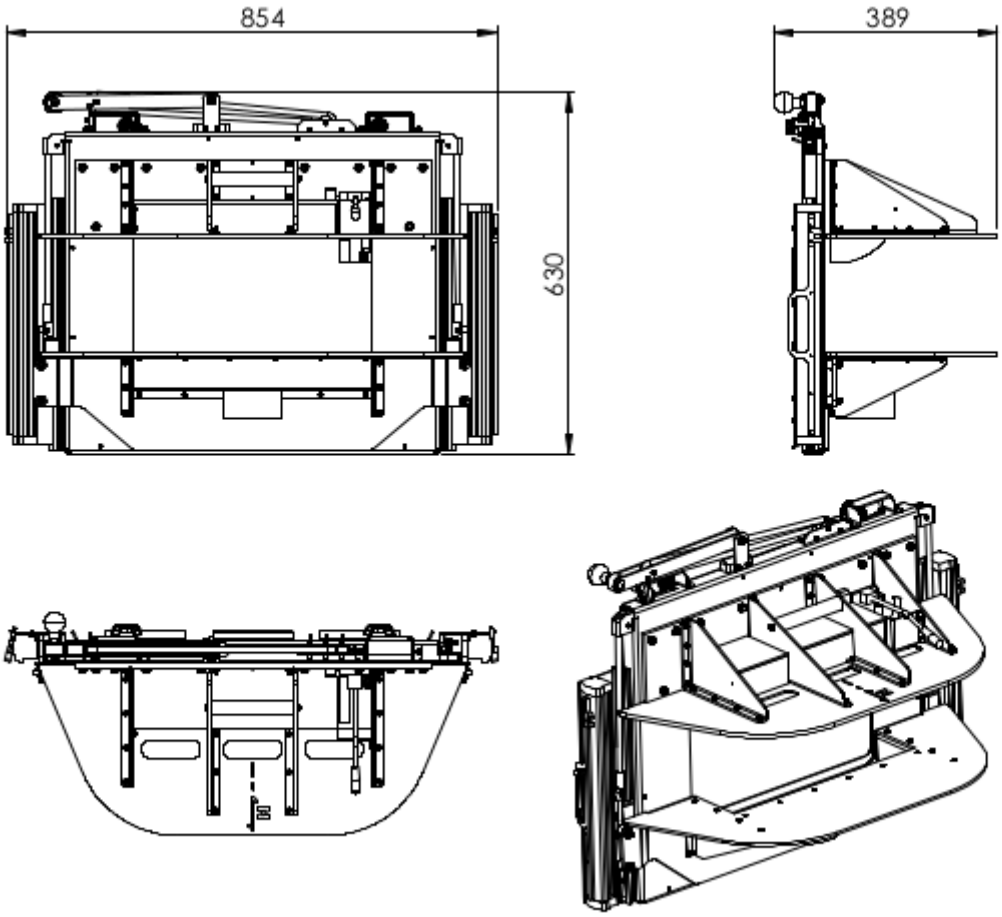

- Mass: 18 kg

Machining Module

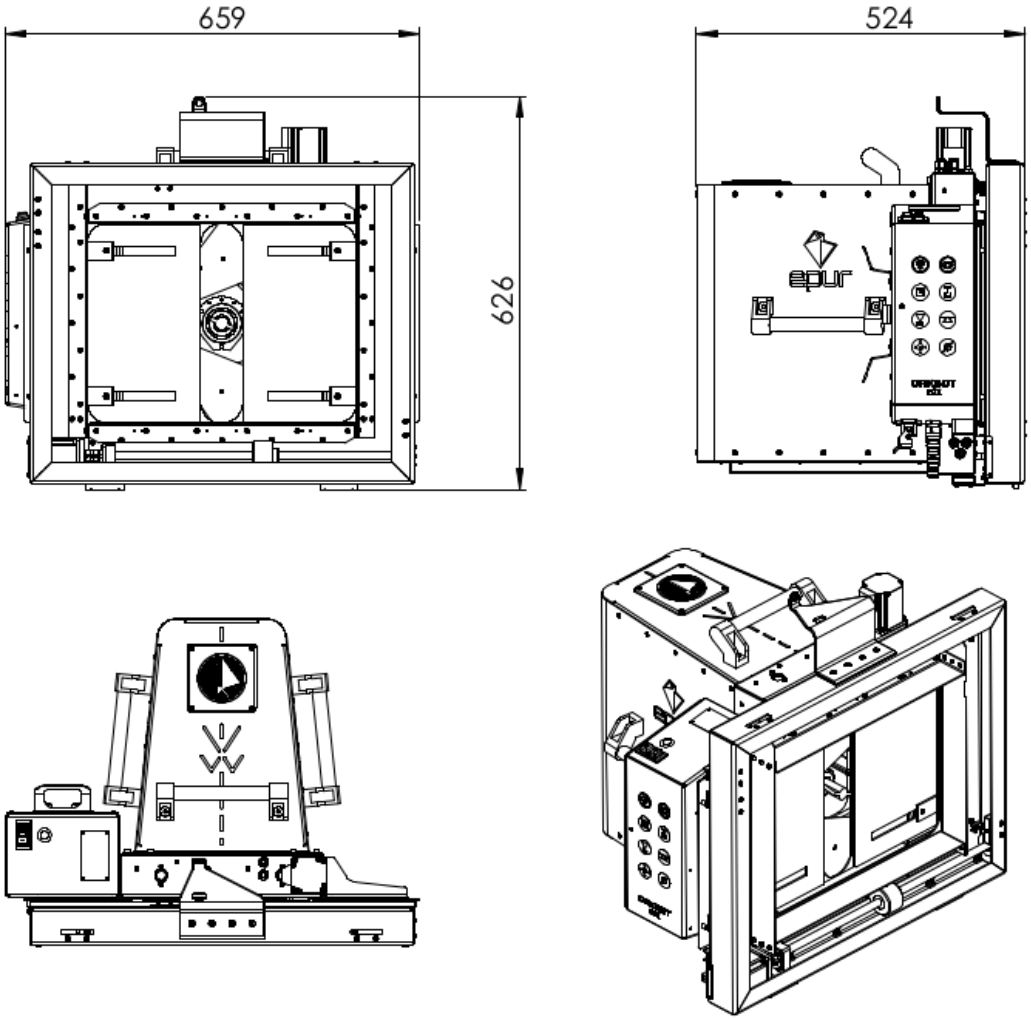

- Mass: 35 kg

Control Unit

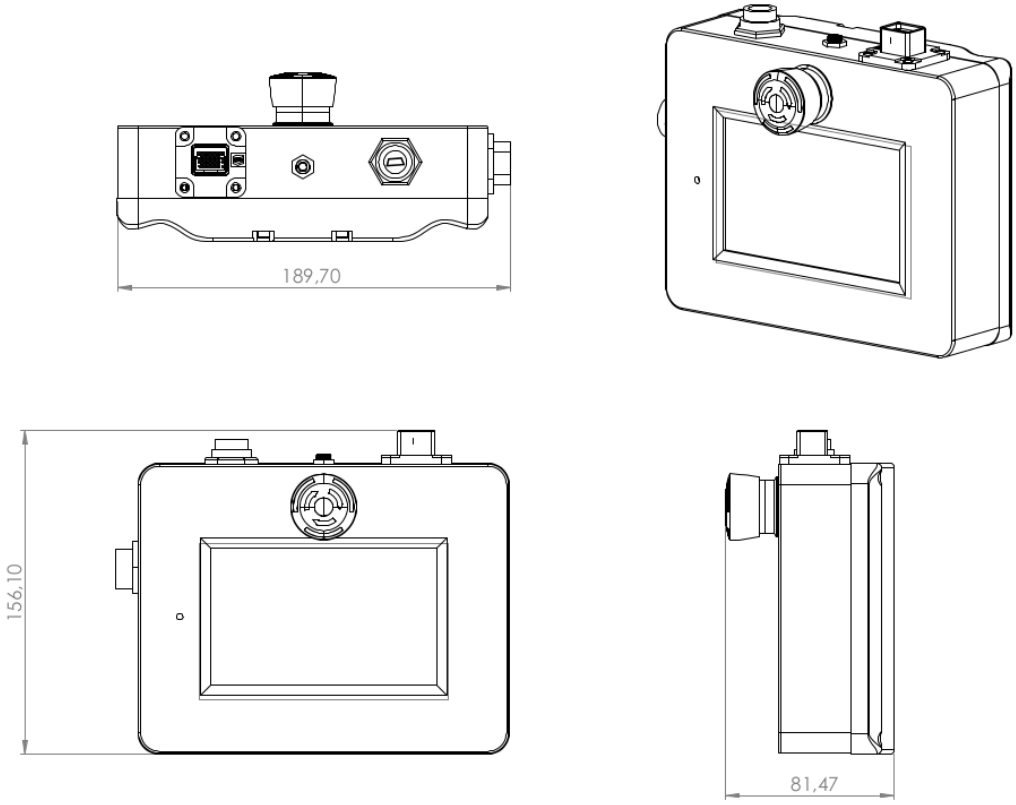

Toolbox

- Systainer toolbox
- Tenon milling cutter – Cylindrical mortise Ø20mm

- Conical dovetail milling cutter Ø max 40 mm

- ER32 spanner wrench & #32 flat spanner

- ER32 collet chuck - 20 mm + nut

- Calibration tool

- Clamps

General Specifications

- Total assembly dimensions: clamping module + machining module:
  - Height: 641 mm
  - Width: 844 mm
  - Length: 825 mm

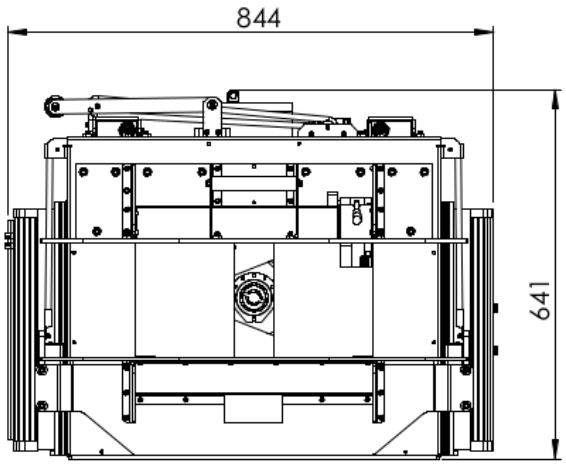

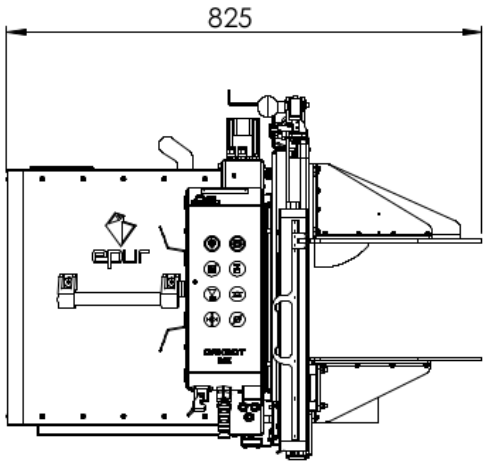

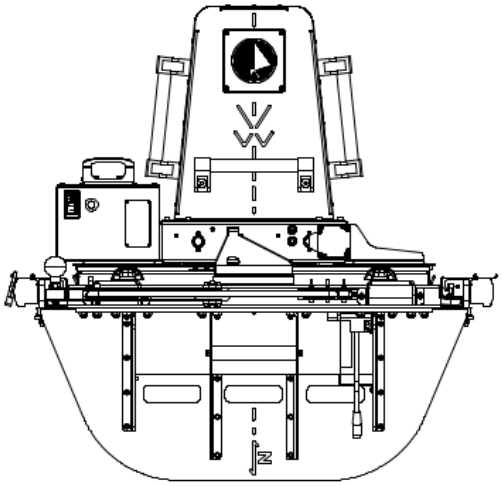

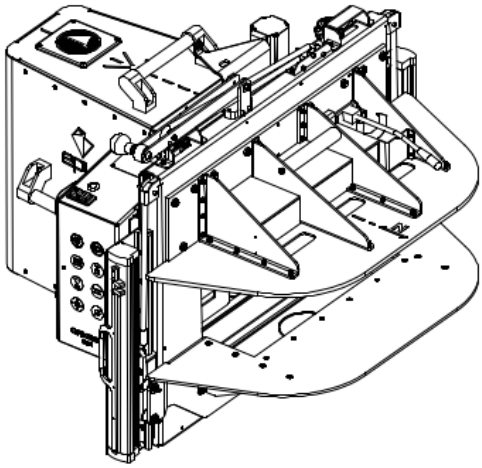

- Mass: 53 kg
- Energy: 220-240 volts AC ~ 50 Hz
- Maximum sound level: 92dB
- X travel: 353 mm
- Y travel: 247 mm
- Z travel: 100 mm

General Recommendations

General

Your OAKBOT is a portable cutting robot for structural timber assemblies and joints of all sorts, including tenons, mortises, dovetail joints... positioning itself at the ends and edges of a beam. Using the OAKBOT will require a trolley for handling the robot as well as a clamp between the robot and the workpiece to be machined. Implementing this stage properly, as described below, is essential for ensuring your own safety and achieving the smooth unit operation. Once clamping is carried out, machining configuration is easy using your remote control which features a touch-control interface to guide you throughout the process. Machining will then be automatic and require no personal intervention during the assembly.

Handling

- For your own safety, wearing safety footwear is mandatory when handling your robot. If the robot falls over during handling, this may result in serious injury to the operator.
- Avoid placing the unit on the ground, so as not to have to lift it into the suspension position. We recommend using the handling trolley which enables you to place your machine at the correct handling height at any time. At all times during machining cycles, the machine must be suspended from the handling trolley.
- If you have to lift your milling machine cutter from the ground, use correct postures and gestures. The same goes when transporting your machine.

	**ADOPT CORRECT POSTURES** **CARRYING**

Environment

To work in complete safety, your work environment must be adapted to OAKBOT use.

Your OAKBOT is a robot: when being used, some parts are fixed, while others are mobile and will enter into movement:

- As a result, its centre of gravity may change during use. Consequently, you must check permanently that instructions for use of the mobile trolley are respected (particularly with cants and slopes) – see the OAKBOT handling trolley user's manual.
- When being moved, your robot will also assume variable dimensions. Consequently, you must check that the robot's moving part is totally free to move and that the environment around your support is sufficiently uncluttered to avoid any risk of collision and any risk of the operator being crushed throughout the whole of the robot's travel. Keep the workspace clean and uncluttered, as congested places contribute to accidents.

/!\ CAUTION /!

Taking all possible positions of the robot into consideration, the OAKBOT's maximum width is 1400 mm.

Test Conditions

In order to use your OAKBOT in the best safety conditions, respect the following rules:

- Only mill wood.
- Only use milling tools supplied by EPUR.
- Check that no foreign body other than wood be present in the part to be machined.
- Always place the beam to be machined with its largest width in a sectional position, parallel to the jaws of the clamping module.
- Ensure that whenever the robot is operating (simply moving or during a machining cycle):
  - The robot is suspended from its handling trolley
  - The robot is snapped into place and locked onto the clamping system
  - The devices for confining off the machining zone are deployed.

/!\ CAUTION /!

The user is fully responsible for checking that no operation is requested to be carried out by the OAKBOT if the latter is not snapped into place and locked properly in its clamping system **with** the devices for confining off the machining zone deployed. The OAKBOT must **also** be suspended correctly from its handling trolley. Failure to respect this rule of use shall release the EPUR SAS Company from any liability whatsoever.

/!\ CAUTION /!

The user shall be fully responsible for positioning the OAKBOT on the workpiece to be machined. In the event of the device tipping over, falling or colliding as a result of the OAKBOT being used, the EPUR SAS Company shall not be held liable in any way whatsoever.

Warning about dimensioning assemblies

/!\ CAUTION/!

Although a digital tool, the OAKBOT is only a milling cutter and, as such, it is up to the user to calculate machining dimensions. In no way can EPUR guarantee the dimensioning of assemblies or joints carried out using the OAKBOT, for any assembly whatsoever. Consequently, the EPUR SAS Company shall not be held liable for any damages or financial losses caused by faulty assemblies.

Safety

Machine status indicator light

Lights indicating machine status (green and red) are located on the robot's electrical control unit.

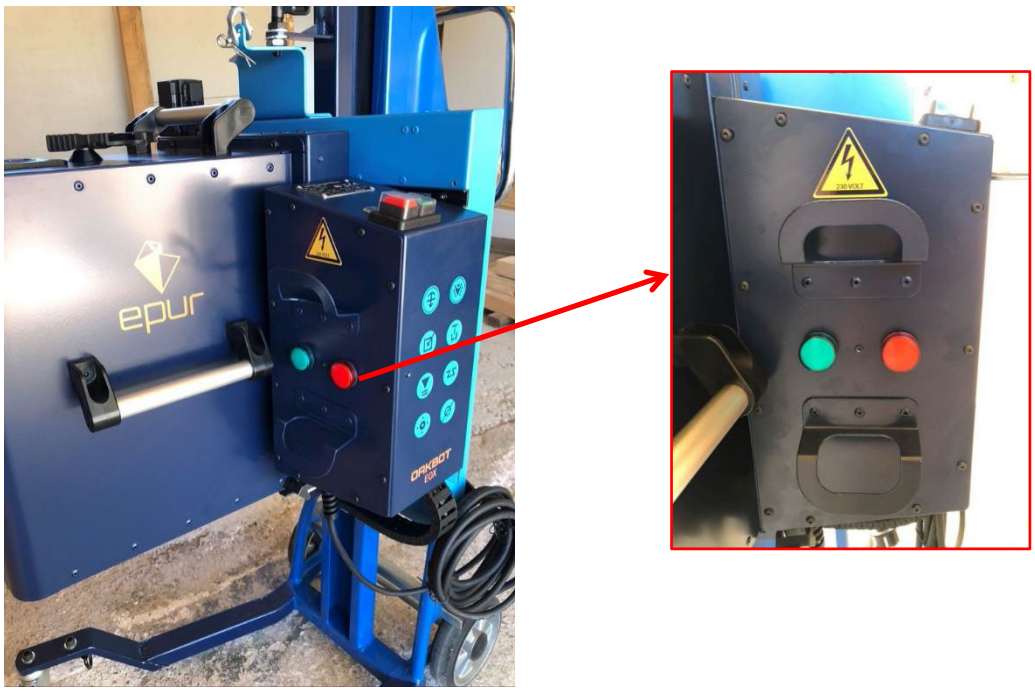

- If the **green light** is on, the machine is ready to be configured.

- **If the red light is on, the robot is machining or moving (even if the user cannot perceive any movement) and <u>the operator must stand aside in the zone situated at the rear of the robot and respect a minimum distance of 1 metre between him/her and the machine.</u>**

/!\ CAUTION /!

Before initiating any action, check that no one is present in the side areas of the machine, regardless of the distance. Also check that no one is present in the front zone, less than 3 metres away from the machine.

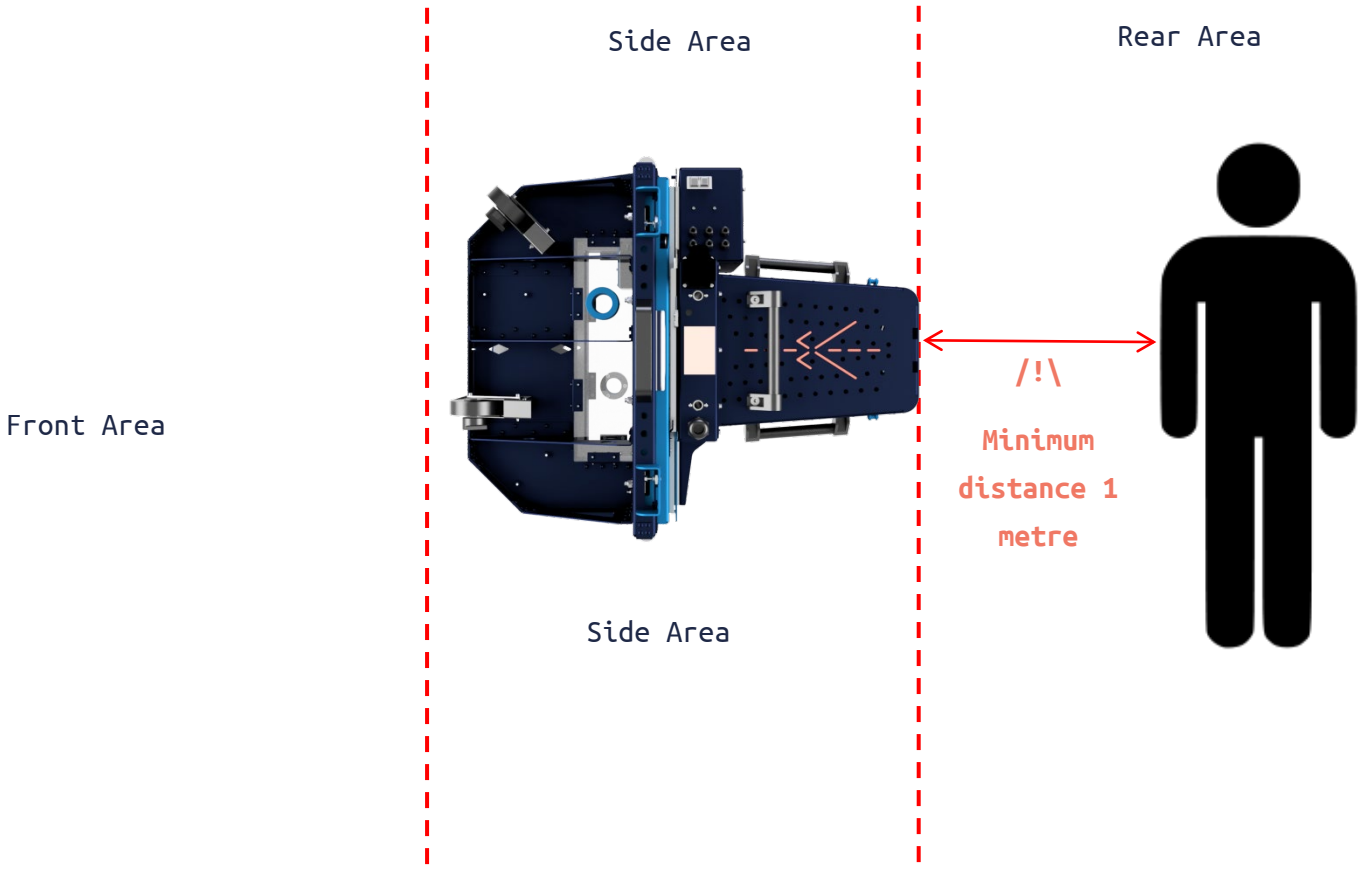

- If the **red** light is flashing, this is because the machine has placed itself in safety status (motor power supplies cut off), which may happen in 2 cases:
  - The emergency stop button has been actuated.
  - The machine has detected an obstacle in its path.

  Whatever the case, the procedure to be followed will be indicated on the screen.

Device prohibiting access to the machining zone

In order to prevent any risk to the user, the device confining off the machining zone must be deployed for any action requested of the machine. This device prohibits access to the machining zone, makes it possible to contain any shavings from

machining and also contain dust and wood chips which the device will make it easier to expel by directing them to the extractor unit. (See user’s guide #9).

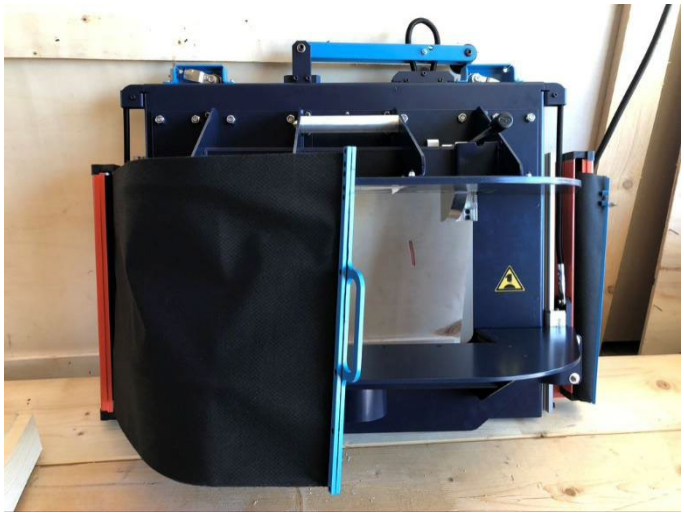

Emergency stop button

The emergency stop button is situated on the remote control.

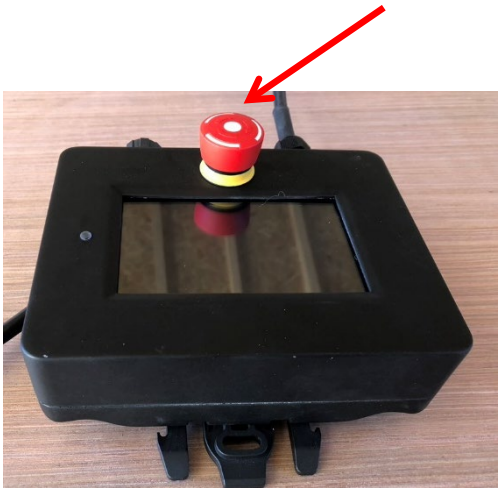

When the button is actuated, the following message is displayed on the screen:

	**CAUTION** **CAUTION** /!\ THE EMERGENCY STOP BUTTON HAS BEEN ACTUATED /!\ To begin use again, disengage the emergency stop button

The reset button

The reset button enables the machine's power supply circuits to be actuated after the machine has been started up or the emergency stop button pressed. This button is located next to the machine's on/off button. The button's contour will flash (orange) if resetting is required and the indication will also be relayed by the user interface.

	**CAUTION** **#1 - MACHINE** Before launching the machining process, press the reset button. **OK**

Positioning errors

If the machine detects a positioning error, the following message will be displayed:

	**CAUTION** /!\ A POSITIONING ERROR HAS OCCURRED /!\ To start using again, initiate the emergency stop button

Clamping detection device

In order to prevent any risk to the user, a built-in safety system makes it possible to inhibit all operations (movement, motor start-up) until the robot is properly snapped into place in its clamping system. Relevant information messages will be displayed on the interface if needs be.

	**CAUTION** **CAUTION CLAMPING** Check that the machine is correctly positioned on the clamp. **OK**	

Instructions for use

#1 - Aim

Your OAKBOT makes it possible to carry out different types of assemblies for timber frames in automated mode. This includes basic assemblies such as tenon & mortise joints, as well as male and female dovetail joints.

#2 – Starting up the OAKBOT

1. The OAKBOT must only be started up if your robot is secured to its handling trolley. Check that the close environment is free and uncluttered and that there is sufficient space for the OAKBOT to carry out its movements. Check that all parts of the robot that are likely to move are free to carry out their movements.

2. If your machine is new, remove all the foam protections which block the machine in a fixed position.

/!\ CAUTION /!

Never start up your milling machine with the spindle motor blocked! This could damage your machine.

3. Check that all accessories and/or protections have been removed from your milling machine before connecting to the mains power supply.

/!\ CAUTION /!

Never connect the control unit after powering up, as this may damage your machine's electrical circuits.

4. Connect the touch-control unit to your milling machine.

5. Connect your OAKBOT milling machine to the mains power supply with the power cable supplied.

6. Switch on your milling machine using the switch on the milling cutter module's electrical unit.

7. After starting up the system, the touch-interface is available for you to begin using your machine.

#3 – Shutting down the machine

1. Click on the star wheel at the top right of the screen to access application parameters. If the star wheel is not available, this is because you are machining. Complete and stop the process in order to access.

	**OAKBOT** ASSEMBLIES - MACHINE MOVEMENTS - CUTTING PARAMETERS – ASSISTANCE WITH POSITIONING

2. Then click on the Turn Off button.

	**PARAMETERS** Languages TURN OFF

3. Wait for the screen to go off to press the red button for cutting off power supply located on the robot's electric box.

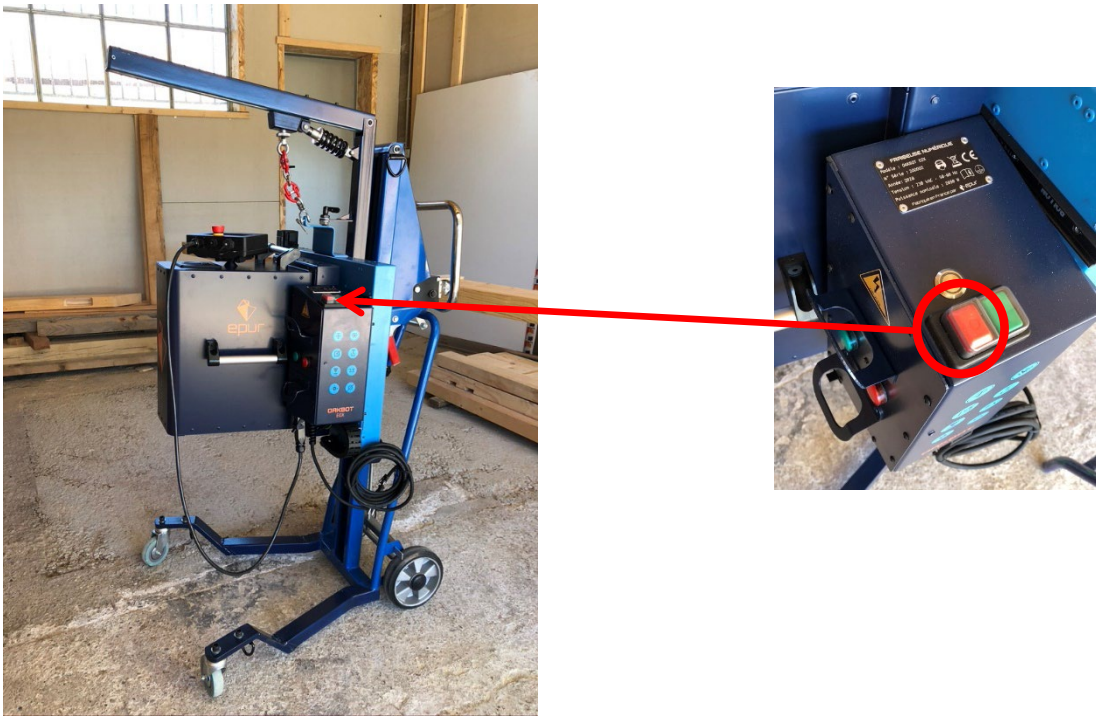

#4 – Milling tools

/!\ CAUTION /!

Because of its specific character, only the two tools (described below) supplied by EPUR may be used with the OAKBOT. Using any other tool could cause collisions with the machine's structure, result in injury to the operator, disrupt your machine or even damage it, as well as the environment, seriously.

/!\ CAUTION /!

For each machining operation, check that the milling cutter physically mounted on the machine actually corresponds to the tool required for the assembly you want to carry out.

/!\ CAUTION /!

Check that the cutter is properly positioned in the chuck and that the position is correct when it butts up against the bottom of the chuck.

According to the type of machining to be carried out, you must choose the suitable tool. Oakbot comes with 2 tools:

- A cutter for tenons and mortises in helicoidal solid carbide, diameter 20mm and total length 145mm

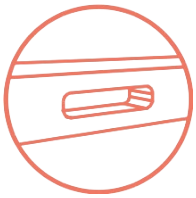

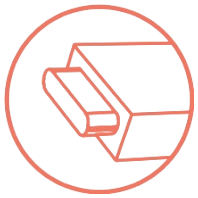

- A tool-holder with carbide inserts for male and female dovetails, maximum diameter 39.5mm and angle 15°

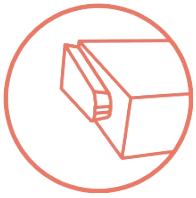

MOUNTING THE CUTTER

/!\ CAUTION /!

The motor's movement for making the chuck accessible or inserting the motor are the only cases where the user will move a machine shaft without the clamping system being present. To avoid any risk, respect the precautions set out in #7, as with any other action of the machine.

During this procedure, the machine must be suspended on the trolley; regardless of the tool being used, the procedure for mounting is the same:

1. Depending on the machine's last position, it may be necessary to move the motor for the chuck to be accessible for mounting the tool.
2. For this, press the **"Machine Movements"** button in the menu, then the **"Disassemble tool"** button.

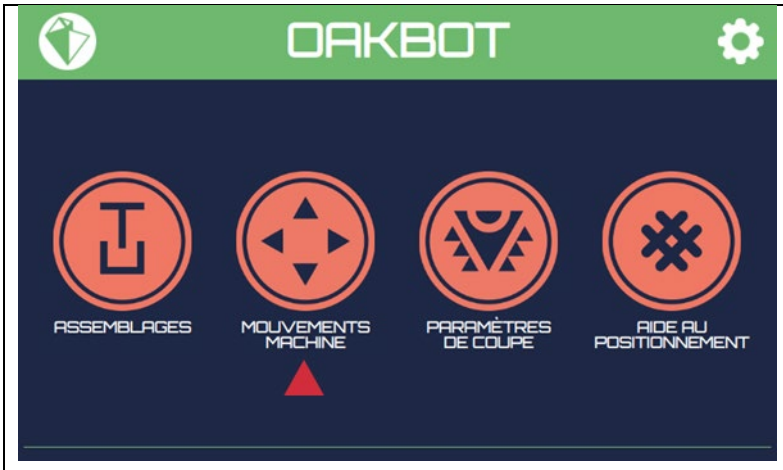	**OAKBOT** ASSEMBLIES - MACHINE MOVEMENTS - CUTTING PARAMETERS – ASSISTANCE WITH POSITIONING	
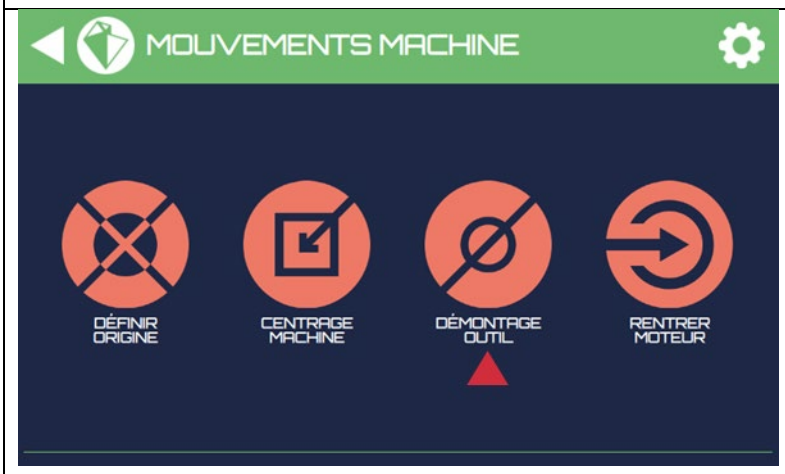	**MACHINE MOVEMENTS** DEFINE ORIGIN – MACHINE CENTERING – DISASSEMBLE TOOL – INSERT MOTOR	

3. Read the precautions to be taken indicated by the interface, then maintain pressure on the **"Extract Motor"** button to make the motor chuck accessible. You may release the button at any time to stop the movement.

CAUTION

#1 - MACHINE

When pressing the "EXTRACT MOTOR" button, the machine will begin to move. RESPECT THE SAFETY RULES. You may release the button at any time to stop the movement. To change the cutter, stop the system and disconnect the power supply.

SHUT DOWN SYSTEM EXTRACT MOTOR

Une fois le moteur en position souhaitée, appuiyez sur «**Arrêt système**» pour eteindre le système.

Once the motor is in the desired position, press the **"Shut down system"** button to switch the system off.

CAUTION

#1 - MACHINE

When pressing the "EXTRACT MOTOR" button, the machine will begin to move. RESPECT THE SAFETY RULES. You may release the button at any time to stop the movement. To change the cutter, stop the system and disconnect the power supply.

SHUT DOWN SYSTEM EXTRACT MOTOR

/!\ CAUTION /!

For your own safety, when assembling or disassembling the tool, the machine should be switched off and the cable disconnected from the mains power supply. When you do this, check out its status and if there is much wear, do not use the machine and contact the after-sales service.

4. At this point, your machine is going to switch off. Wait for the indicator lights to go off and **disconnect the power supply cable from the mains socket. Press the machine's "Stop" button** (**red button**).

5. You can now carry out work on the machine. Use the 32-mm flat spanner to stop the chuck from turning, and the spanner-wrench to unscrew the spindle nut.

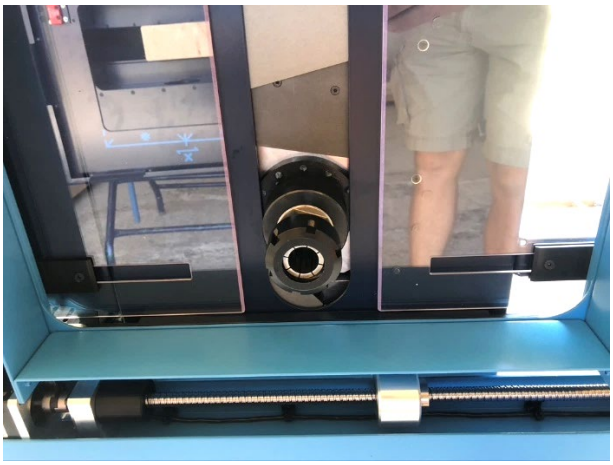

6. Without unscrewing the nut entirely, put the tool into the spindle's collet chuck, **checking that it has gone to the bottom of the chuck.** If such is not the case, this will lead to dimension errors on machining.

/!\ CAUTION /!

Check that the diameter of the ER32 collet chuck corresponds correctly with the diameter of the tool shank.

7. You can now retighten the spindle nut, using the 32 flat spanner and the spanner-wrench. Check that the nut is sufficiently tight so that it is properly kept in place.

8. Measure the tool so as to configure the machine subsequently:

Using a rule or gauge, measure the distance between the chuck's nut and the end of the tool. The measurement must be extremely accurate (0.5 mm).

Incorrect measurement will cause machining that is non-compliant with the dimensional specifications you entered.

9. Connect the power supply cable to the mains supply and start up the machine again by pressing the **green start button**.

10. When changing the cutter and starting the spindle again, the system will propose placing the spindle in position 0 on the Z axis in order to avoid any collision between the cutter and the clamping system or the beam.

Following the warning, maintain pressure on the "Insert motor" button until movement stops. Then press "Terminate", and the cutter assembly procedure is over.

	**CAUTION** #1 - MACHINE The tool will position itself to be disassembled. Check that the clamping jaw is entirely open. Once the system has stopped, disconnect the machine's power supply before changing the tool. After validation, the machine will start to move. RESPECT SAFETY RULES CONTINUE	

/!\ CAUTION /!

Although highly efficient, your milling machine can in no way automatically detect the type of tool assembled. You are solely and entirely responsible for always checking that the cutter installed corresponds to the type of milling to be carried out.

	**CAUTION** INSERTING THE MOTOR By pressing the "INSERT MOTOR" button, the machine will begin to move. RESPECT THE SAFETY RULES. You may release the button at any time to stop the movement. TERMINATE INSERT MOTOR	

#5 - Calibration

Homing

Once the system has started up, your milling cutter must define a point of origin. This operation is only necessary when you start the machine up and will not have to be repeated between different machining processes, except if you have used the emergency stop button or if there was a power cut.

The aim of this operation is to define the 0 point of origin, which subsequently will enable your OAKBOT to know where it positions itself in its three-dimensional space.

To carry out this operation, check that the machine is in a position corresponding to the abovementioned environmental constraints, then implement the following stages:

1. Using the main (**OAKBOT**) menu, enter the calibration menu by clicking on the **MACHINE MOVEMENTS** icon, then **DEFINE ORIGIN**.

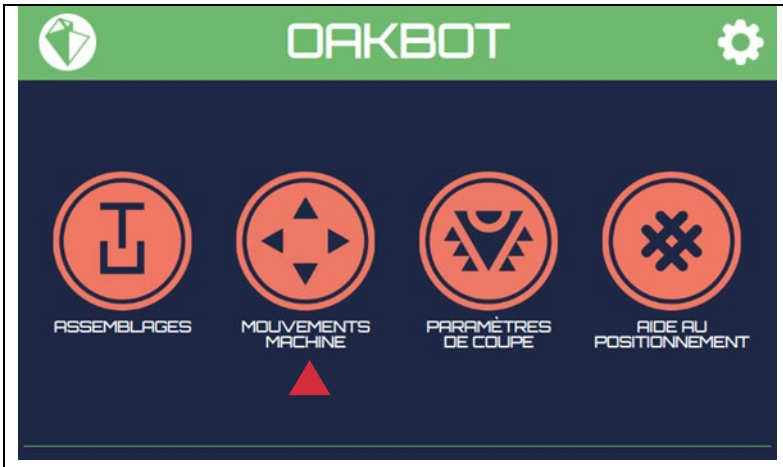	**OAKBOT** ASSEMBLIES - MACHINE MOVEMENTS - CUTTING PARAMETERS – ASSISTANCE WITH POSITIONING

2. Then click on **DEFINE ORIGIN**. Now the machine will begin to move to define its point of origin and will consequently direct itself towards the end of each axis. Once this has been carried out, your machine will automatically reposition itself at its optimum point of balance.

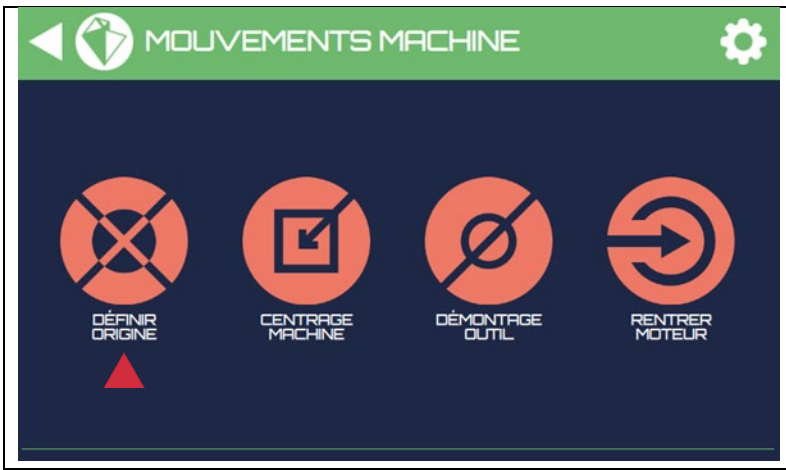	**MACHINE MOVEMENTS** DEFINE ORIGIN – MACHINE CENTERING – DISASSEMBLING TOOL – INSERT MOTOR

CALIBRATION

When you first start your OAKBOT up and subsequently from time to time during use, you must carry out calibration between the machining module and the clamping module.

1. For that, it is essential initially to assemble the dedicated calibration tool. Follow the assembly procedure as described above.

Defining the tool in the interface

To take into account the measurements carried out on the tool when being assembled, go to the following menu:

2. Using the main (**OAKBOT**) menu, enter the calibration menu by clicking on the **CUTTING PARAMETERS** icon, then **MACHINE CALIBRATION**.

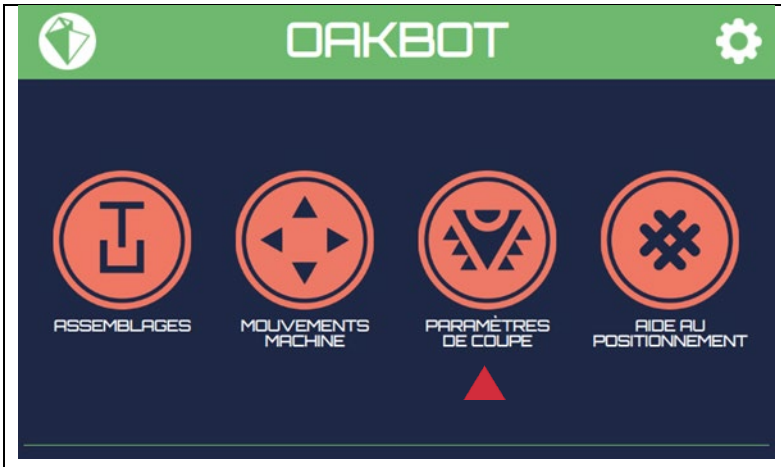	**OAKBOT** ASSEMBLIES - MACHINE MOVEMENTS - CUTTING PARAMETERS – ASSISTANCE WITH POSITIONING	

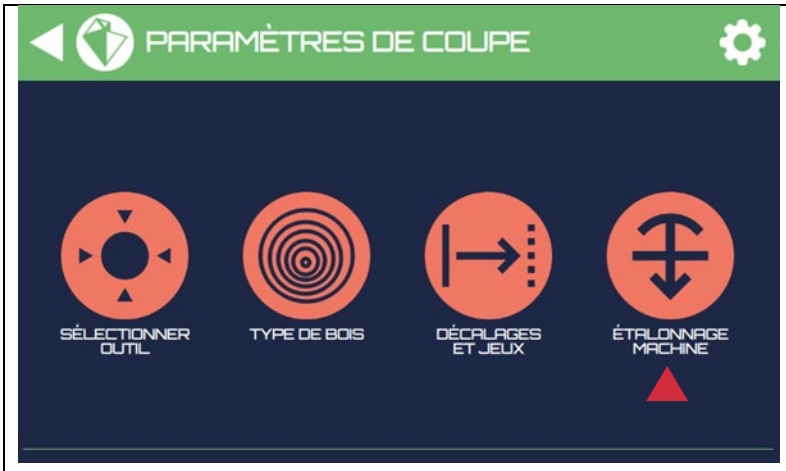	**CUTTING PARAMETERS** SELECT TOOL – TYPE OF WOOD – OFFSETS & PLAY – MACHINE CALIBRATION	

Then:

Finally, select your tool and define its characteristics of length and diameter precisely. Once done, press "OK".

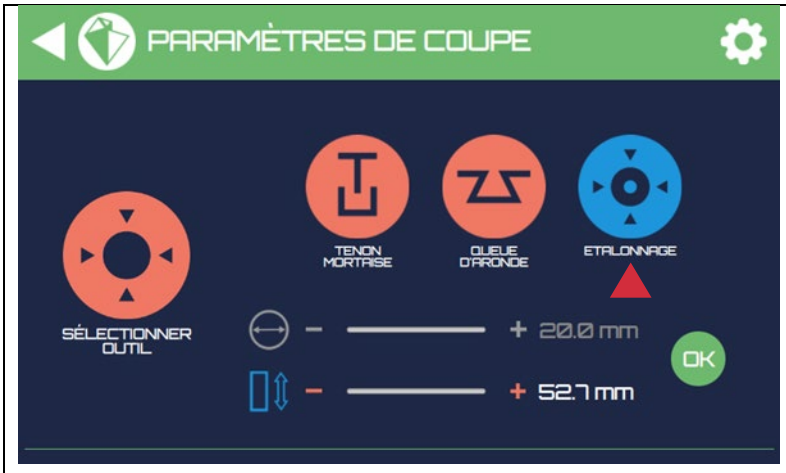	**CUTTING PARAMETERS** SELECT TOOL TENON & MORTISE – DOVETAIL – CALIBRATION OK	

Your OAKBOT has now started up, its tool is configured and calibration can be carried out.

3. See that the conditions for use have been met (see Test Conditions).

4. Using the main (**OAKBOT**) menu, enter the calibration menu by clicking on the **CUTTING PARAMETERS** icon.

	**OAKBOT** ASSEMBLIES - MACHINE MOVEMENTS - CUTTING PARAMETERS – ASSISTANCE WITH POSITIONING	

5. Then click on **MACHINE CALIBRATION**. The machine will move into position for calibration.

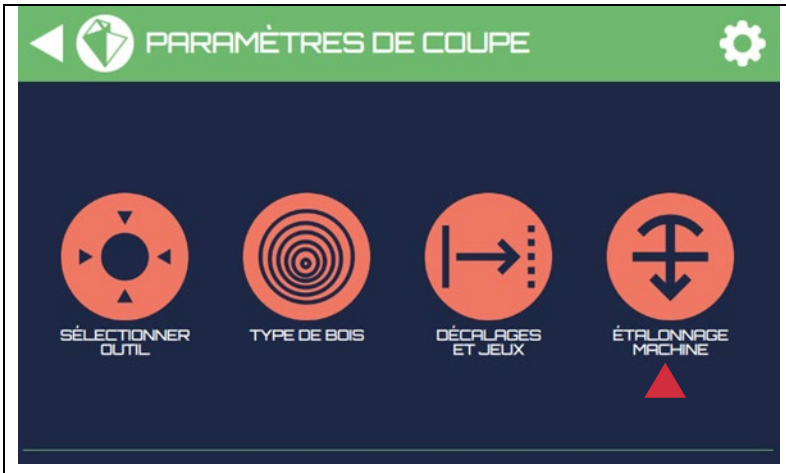	**CUTTING PARAMETERS** SELECT TOOL – TYPE OF WOOD – OFFSETS & PLAY – MACHINE CALIBRATION	

6. Using the X+, X-, Y+, Y-, Z+ and Z- buttons, you can move the tool along three axes. The aim is to align the calibration tool with a physical point on each of the axes.

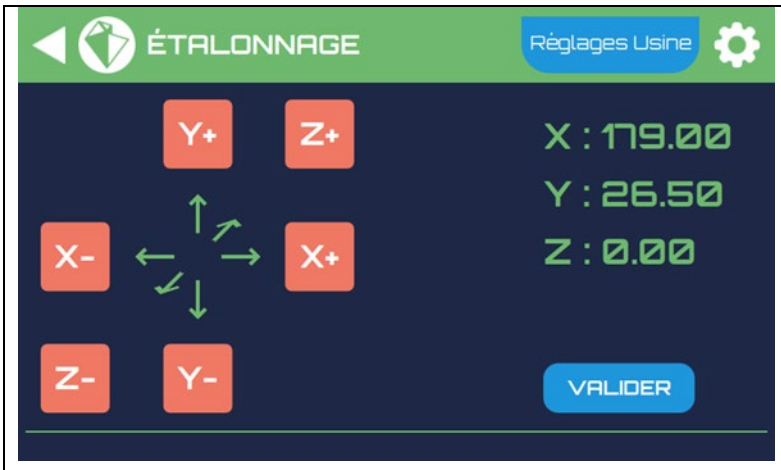	**CALIBRATION** Factory Settings **OK**	

7. Initially, press Z+ until the end of the tool is aligned with the reference line on the polycarbonate clamping plate. Once aligned, do not touch this axis any more until the calibration process is over.

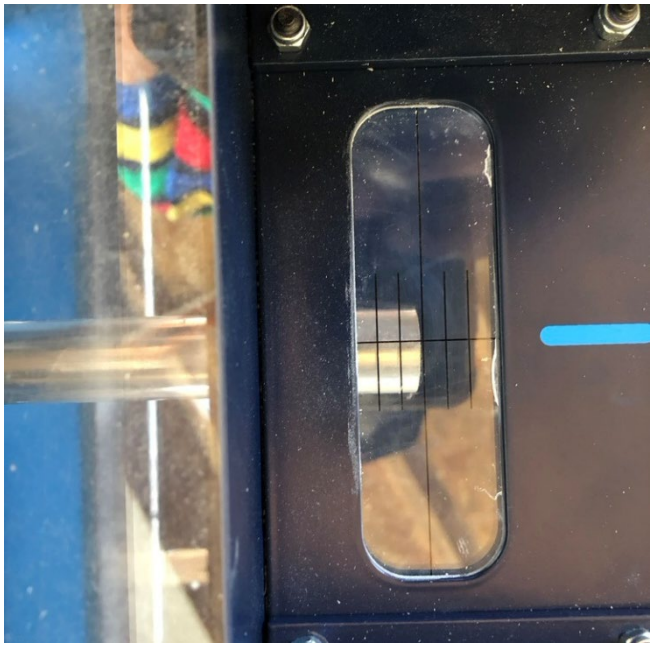

8. Then go to Y to align the top of the tool with the bottom of table Y. Come into slight contact with the table, being careful not to force. Once in contact, do not touch this axis any more until the calibration process is over.

9. Finally, for the X axis, lower the mechanical stop. Then bring into contact with the side of the tool, while being careful not to force once the tool is in contact.

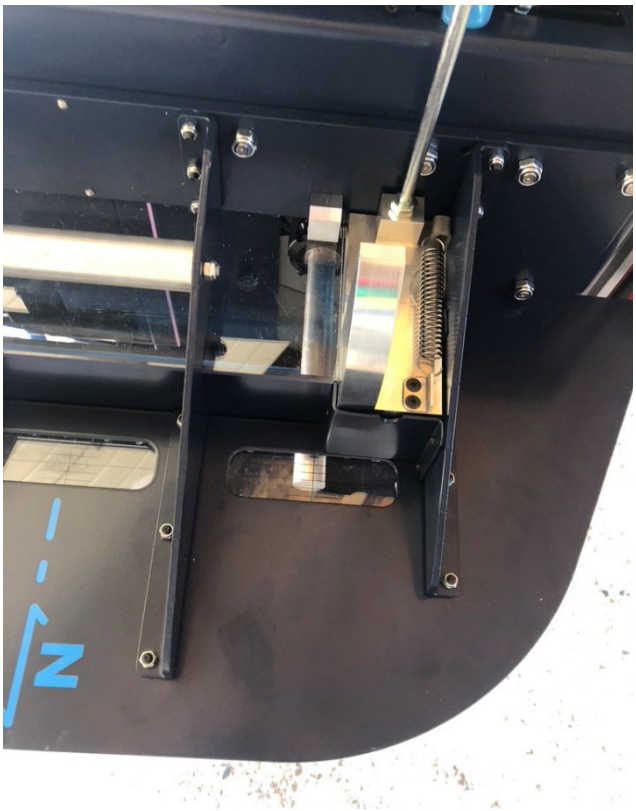

10. Once the three reference points have been aligned, press OK to calibrate.

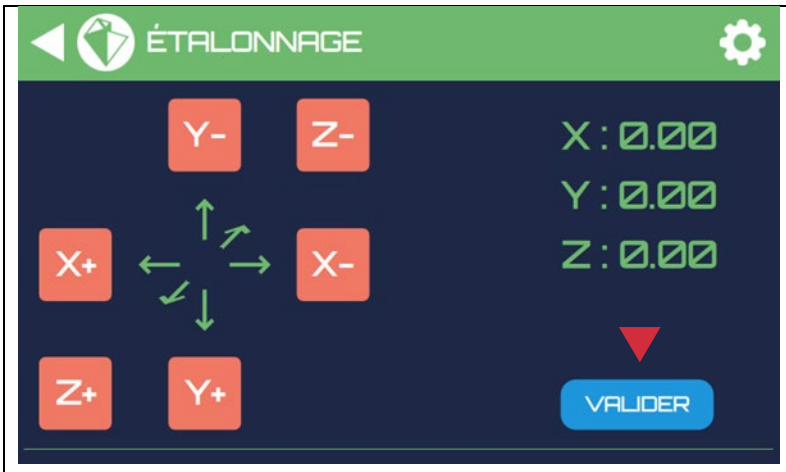	**CALIBRATION** **OK**	

#6 – Preparing the pieces of wood

In order to reference and machine with your OAKBOT, one or two operations are required on your workpieces, depending on the type of machining you wish to carry out.

MACHING EDGES

Trace the assembly axis to be made at right angles on the edge of the beam. This axis line will make it possible to position the (X) reference point on the clamping module.

MACHINING ENDS

1. Trace the shoulder of the desired assembly

2. Trace a line parallel to the shoulder line (distance indicated by the machine depending on the type of tool)

If needs be, cut the end of the beam parallel with the shoulder in order to obtain the desired assembly length between the previously traced shoulder and the end of the beam.

#7 – Putting the Clamping Module in place

The clamping module is an OAKBOT accessory making it possible to attach and hold your robot to the workpieces to be machined.

This light and easy-to-handle module will enable you to position the workpiece easily and accurately.

Once in position and attached to the beam with the clamps, it will hold the robot and workpiece tightly in place together.

Once positioned and locked onto the workpiece, the module is ready to receive the robot.

3-AXIS SYSTEM AND REFERENCING

The clamping module ensures good referencing between the robot and the workpiece to be machined. Your robot has three travel axes: Width (X), Height (Y) and Depth (Z).

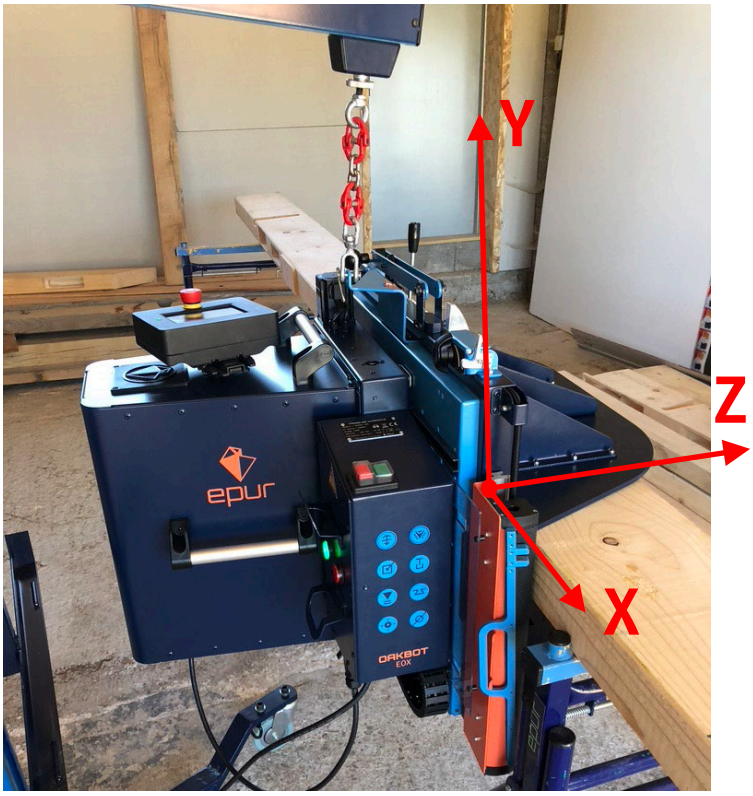

The table perpendicular to the apron has an axis reference point which makes it possible to set the reference along the (X) axis of the workpiece.

Depending on the case, you can use:

- the clamp sighting reference port.

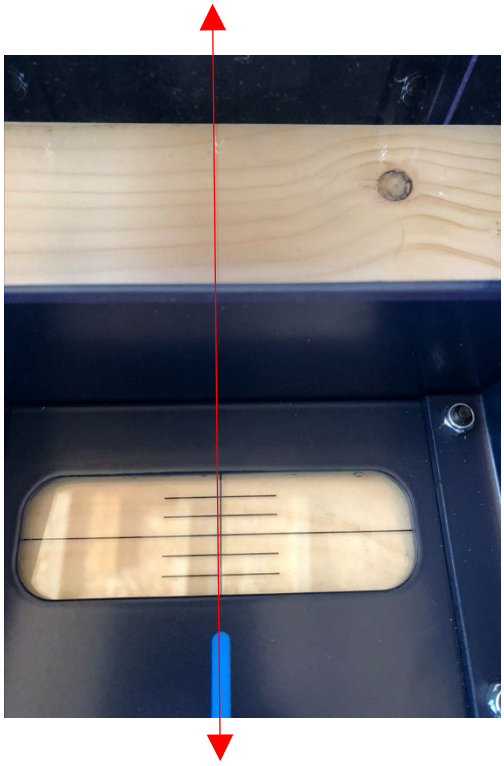

- the parallel reference (whose values are accessible in the references menu).

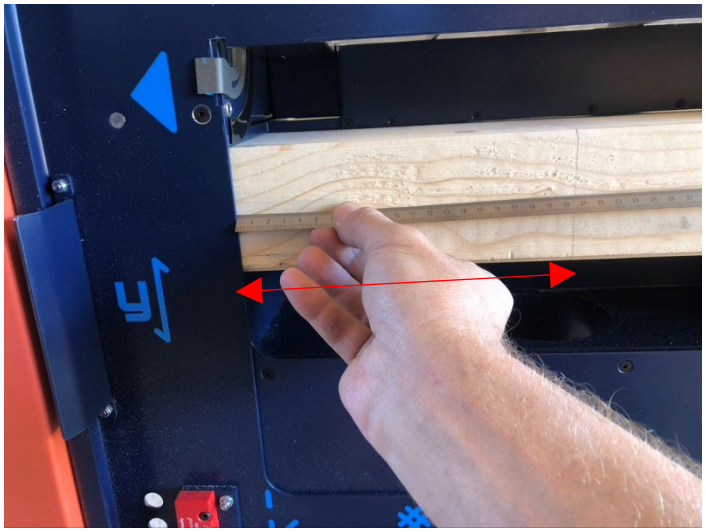

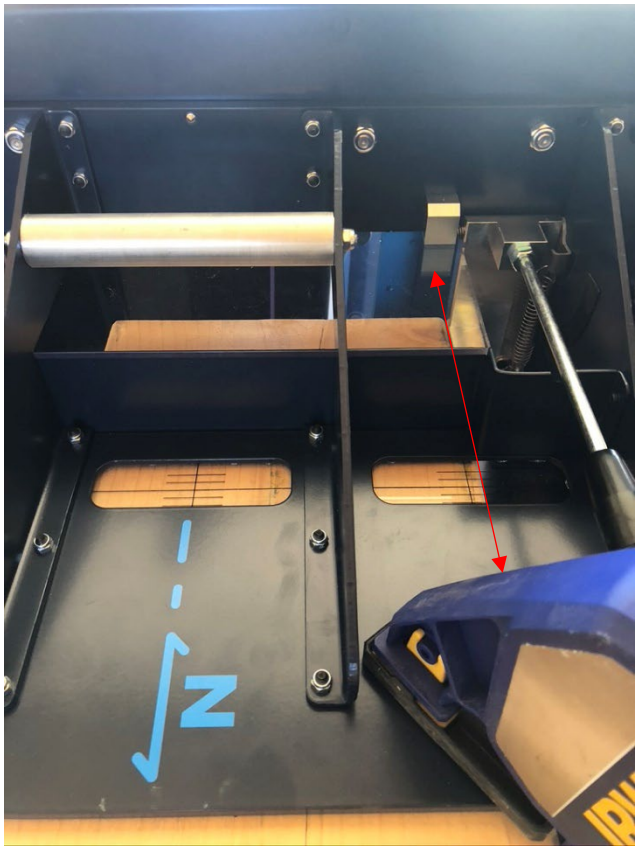

The lower surface of the table will be in contact with the surface of the workpiece, representing the reference along (Y).

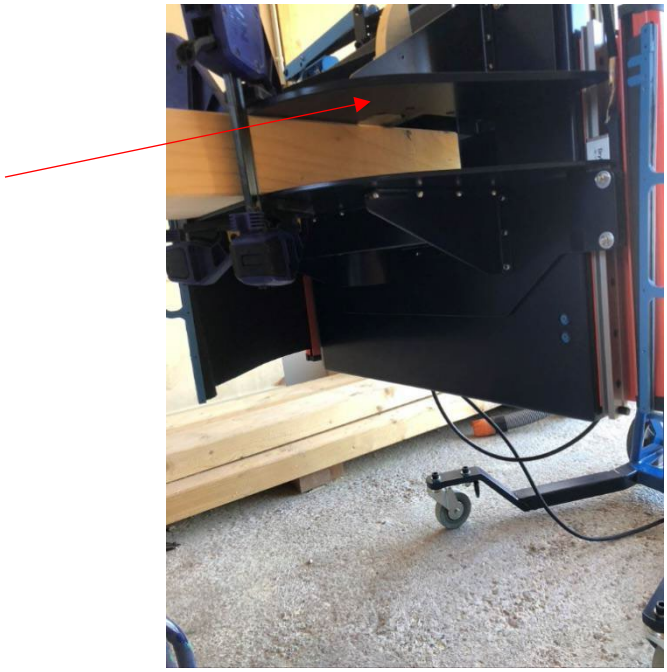

Finally, the depth reference: depth reference (Z). There are two possible configurations: one for working pieces at the end and one for working pieces along the edge.

For working pieces along the edge, the apron surface acts as a stop for setting the reference.

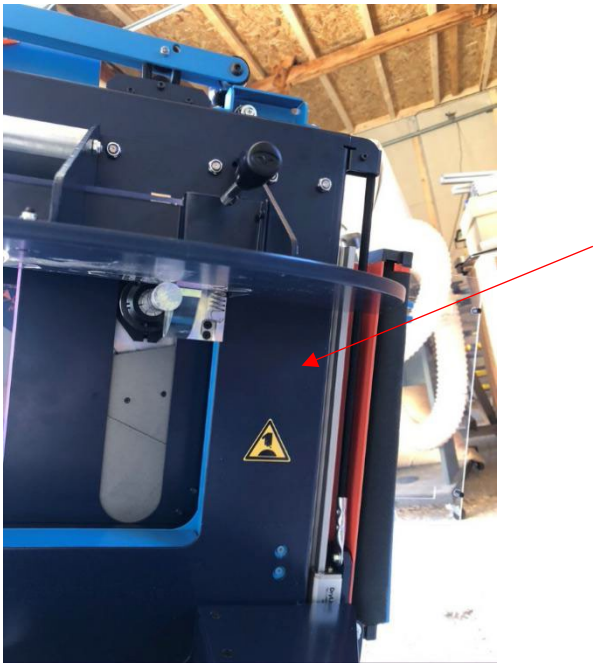

For working pieces at the end, the stop for the setting the reference must be aligned with the clamping reference line parallel to the shoulder traced when the piece of wood was being prepared (see #6).

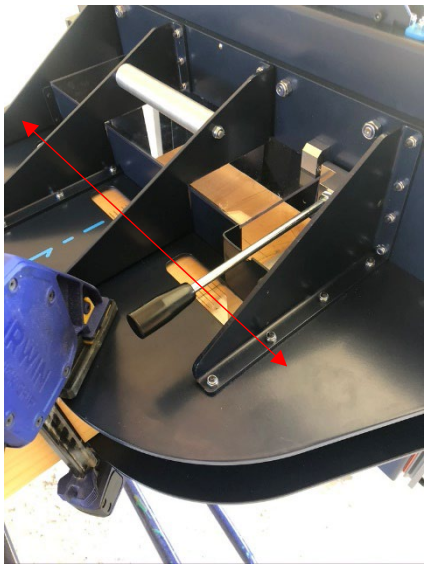

CLAMPING WORKPIECES

The clamping system is made up of two tables perpendicular to the apron which will act as a jaw, sandwiching the pieces of wood.

An integrated pre-clamping system makes it possible to hold a workpiece in place initially. The system is actuated by using the lever on the upper part of the clamping system.

The clamps supplied will then ensure definitive clamping between the clamping system and the workpiece.

#8 - Use

Your workpiece is now ready to receive the OAKBOT. To ensure proper positioning, respect the following stages (depending on the type of machining: edge or end).

EDGE MACHINING

1. Position your clamping module while checking that the reference setting is respected along the three axes (see #7).
2. Actuate the pre-clamping lever; the lower table must butt up against the lower surface of the wood.

3. Put the clamps in place, one on each side on the front so that they do not impede the OAKBOT's movements. Tighten the clamps supplied to the maximum to hold everything sufficiently tight in place during the machining process. Check the whole clamping system.

END MACHINING

1. Position your clamping module while checking that the reference setting is respected along the 3 axes (see #7).
2. Actuate the pre-clamping lever; the lower table must butt up against the lower surface of the wood.

4. Position the clamps, one on each side as close up to the beam as possible in such a way that they do not impede the device for confining machining from being put in place. Tighten the clamps supplied to maximum capacity to hold everything sufficiently tight in place during the machining process. Check the whole clamping system.

/!\ CAUTION /!

It is essential that the clamp takes the workpiece as if in a vice; never position it around any free space between the clamping tables.

Coupling the OAKBOT

1. Insert the OAKBOT, always beginning at the bottom (tilting the robot slightly back to achieve this).

2. Once the bottom has been slotted in, redress the OAKBOT and lock in position using the 2 dedicated locking levers. Check that the lever goes to the end of its travel.

3. Once the whole clamping process is over, make a final check to see that the clamps are properly tightened and that locking between the OAKBOT and its clamping module is correct.

Your OAKBOT is now ready to carry out machining.

/!\ CAUTION /!

Any faulty handling during these phases may result in risks to the operator, machine and the environment, **in which case, the EPUR SAS Company shall not be held responsible.**

/!\ CAUTION /!

Once the whole clamping process is over, carry out a final check to see that clamps are properly tightened and that locking between the OAKBOT and its clamping module is correct. Poor application of these instructions may result in risks to the operator, machine and the environment **in which case, the EPUR SAS Company shall not be held responsible.**

#9 – Using the device for prohibiting access to the machining zone

In order to optimize risk prevention for the user, the device for confining the machining zone must be deployed when any action is requested of the machine. This device prohibits access to the machining zone, makes it possible to contain the shavings that may result from machining and also contain dust and wood chips which the device will make it easier to expel by directing them to the extractor unit.

This system must be deployed in all machining configurations in the following way:

Unroll the Kevlar canvas as close to the beam as possible.

Use the locking mechanism on the clamping table.

Unfold the system in this way either side of the beam.

When carrying out edge machining with a piece that protrudes either side of the machine, putting this system in place is not necessary. In all other machining configurations, using this system is needed.

#9 – Using the user interface

The touch-interface on the wired control unit has a modern application, equivalent to those on smartphones. It will facilitate setting the parameters for your different forms of machining.

HEADER BANNER

The header banner contains the name of the menu where you are and is featured on all application windows. It contains the **EPUR logo** (to the left) which will enable you at any time to return to the main (**OAKBOT**) menu.

	**OAKBOT** ASSEMBLIES - MACHINE MOVEMENTS - CUTTING PARAMETERS – ASSISTANCE WITH POSITIONING	

The star wheel to the right makes it possible to access system parameters (**PARAMETERS**).

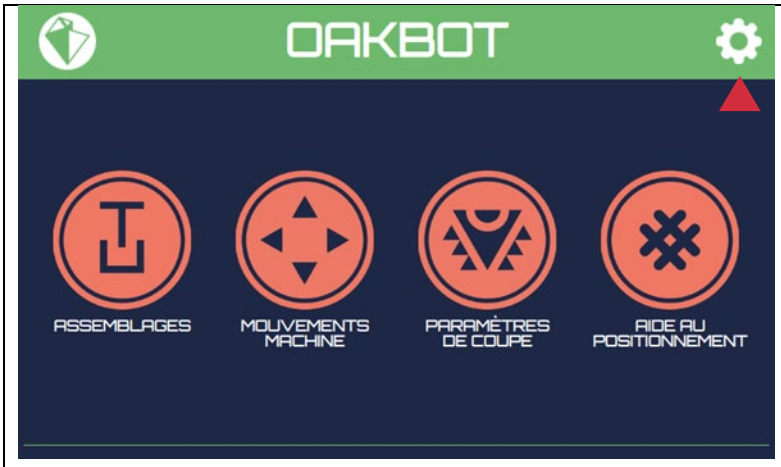	**OAKBOT** ASSEMBLIES - MACHINE MOVEMENTS - CUTTING PARAMETERS – ASSISTANCE WITH POSITIONING	

In the application, an arrow will be displayed to the left of the EPUR logo making it possible to return to the previous page at any time.

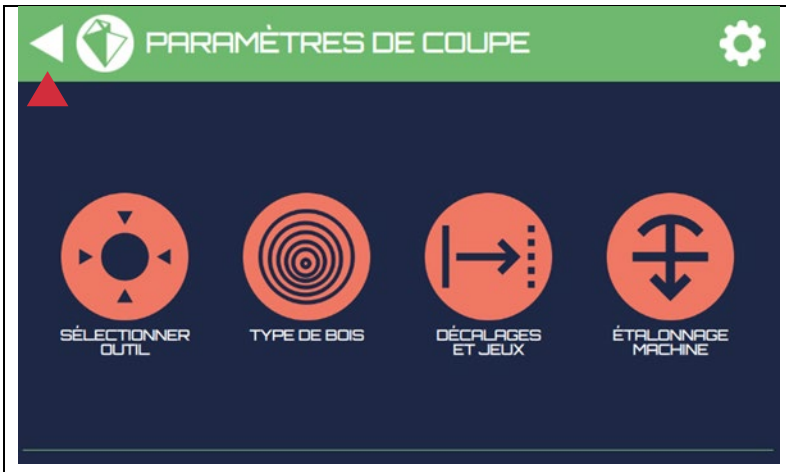	**CUTTING PARAMETERS** SELECT TOOL – TYPE OF WOOD – OFFSETS & PLAY – MACHINE CALIBRATION	

MAIN MENU

The main OAKBOT menu contains four icons:

1. **ASSEMBLIES**: makes it possible to access the configuration menu for the different forms of machining.

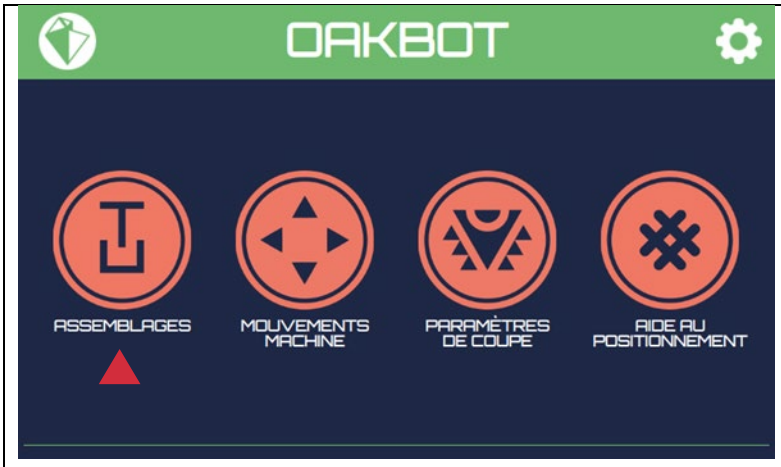	**OAKBOT** ASSEMBLIES - MACHINE MOVEMENTS - CUTTING PARAMETERS – ASSISTANCE WITH POSITIONING	

2. **MACHINE MOVEMENTS**: makes it possible to access the machine's positioning tools.

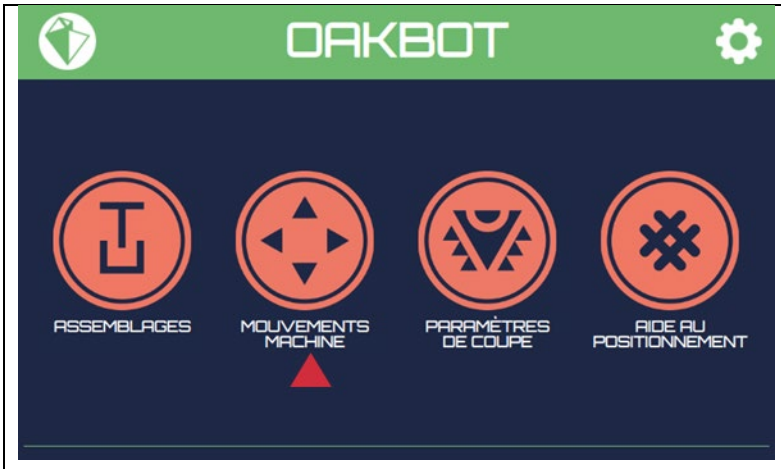	**OAKBOT** ASSEMBLIES - MACHINE MOVEMENTS - CUTTING PARAMETERS – ASSISTANCE WITH POSITIONING	

3. **CUTTING PARAMETERS**: makes it possible to access the configuration of tools and types of wood to be machined, as well as the machine's calibration tool.

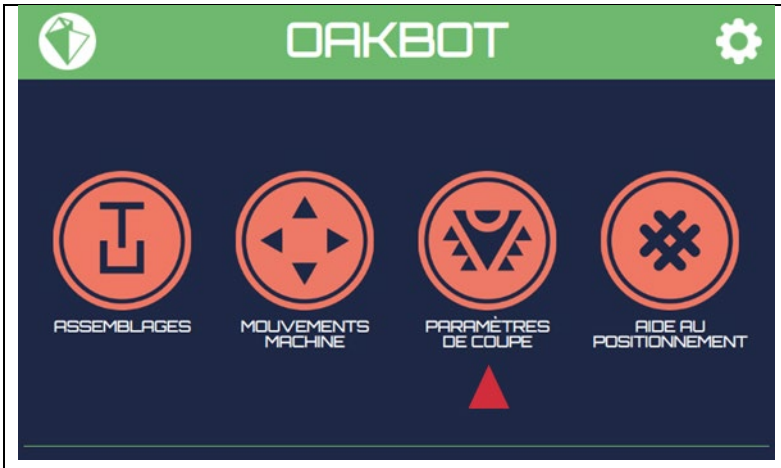	**OAKBOT** ASSEMBLIES - MACHINE MOVEMENTS - CUTTING PARAMETERS – ASSISTANCE WITH POSITIONING	

4. **ASSISTANCE WITH POSITIONING:** makes it possible to obtain interactive assistance with regard to the machine's axes, shoulder lines and positioning the clamping system.

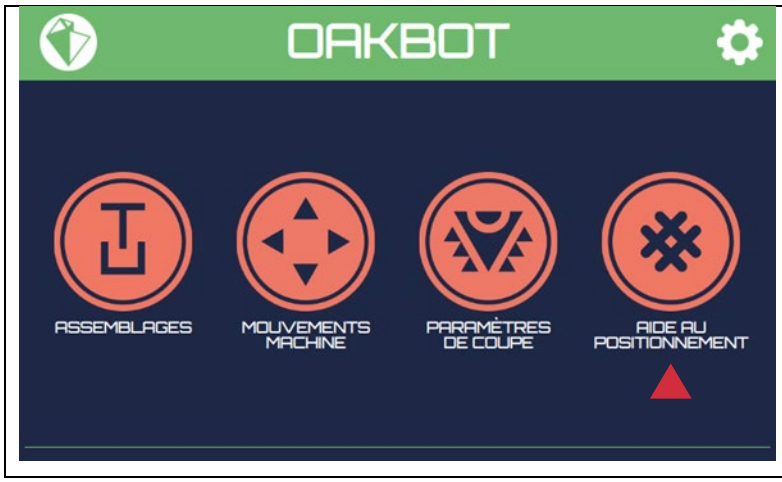	**OAKBOT** ASSEMBLIES - MACHINE MOVEMENTS - CUTTING PARAMETERS – ASSISTANCE WITH POSITIONING	

CONFIGURING AN ASSEMBLY

1. After installing your machine, configuring your tool and setting the point of origin (see #4 et #5), from the main (**OAKBOT**) menu, simply go to the **ASSEMBLY** menu.

2. Select the type of assembly you wish to carry out (here a straight single tenon with 4 shoulders: TENON & MORTISE -> TENON -> SINGLE TENON -> STRAIGHT TENON -> 4-SHOULDER TENON).

	ASSEMBLIES HISTORY Tenon & Mortise - Dovetail - Notched joint
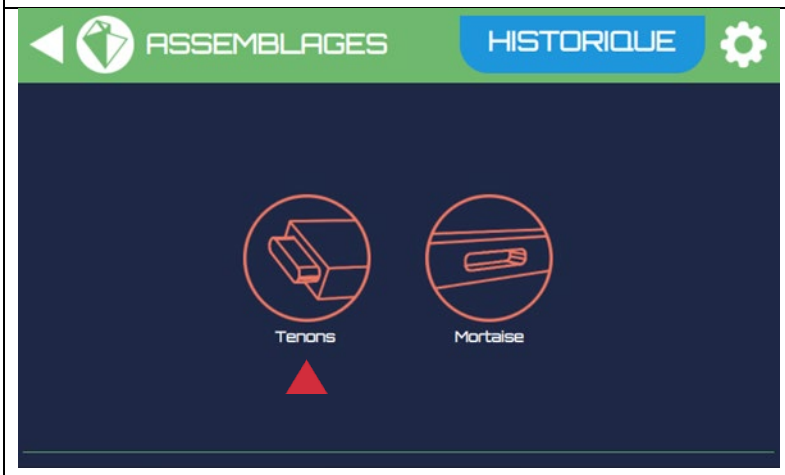	ASSEMBLIES HISTORY Tenon Mortise
	ASSEMBLIES HISTORY Single Tenon Double Tenon

	ASSEMBLIES HISTORY Straight Tenon Skewed Tenon
	ASSEMBLIES HISTORY 2-shoulder Tenon 4-shoulder Tenon

3. The machining configuration menu will appear when selecting an assembly and will display:

   - A scrolling list of explanatory images on each parameter to be defined.

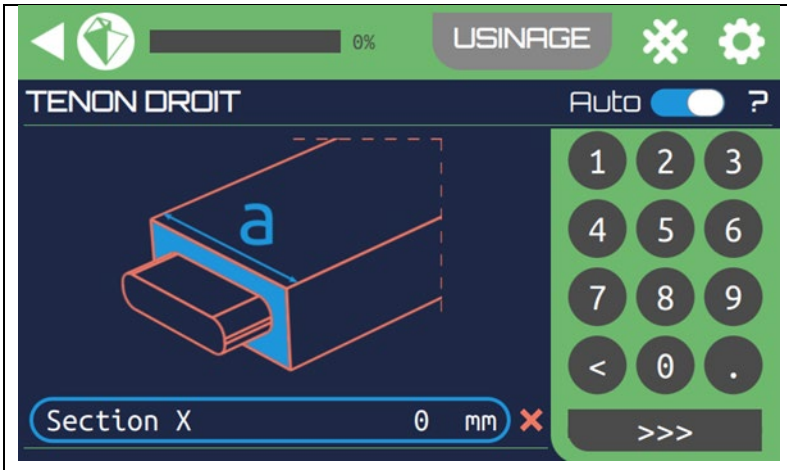	**MACHINING** STRAIGHT TENON Auto X Section 0 mm

- On the right-hand side of the screen, there is a keypad for entering values.
- To enter a parameter, simply touch the field to be filled in.

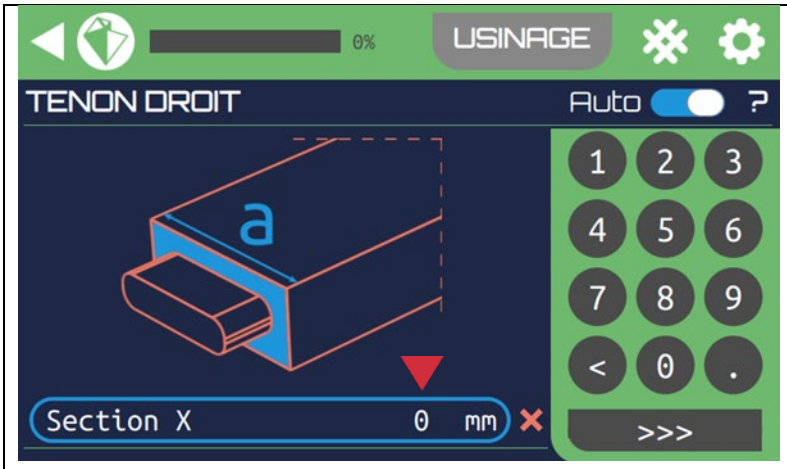	**MACHINING** STRAIGHT TENON Auto X Section 0 mm	

- All user-entered parameters are checked and the application will tell you if you enter a value that is incompatible with the machine's possibilities.
- In the header banner, a progress bar indicates the status in the parameter-entering process.

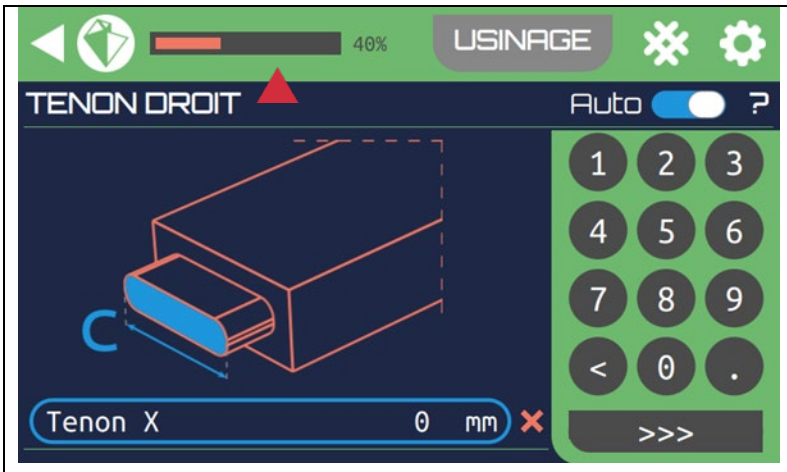	**MACHINING** STRAIGHT TENON Auto X Tenon 0 mm	

In the header banner, you will find a MACHINING button that will be activated when all parameters have been correctly entered and take you to the menu for starting up machining.

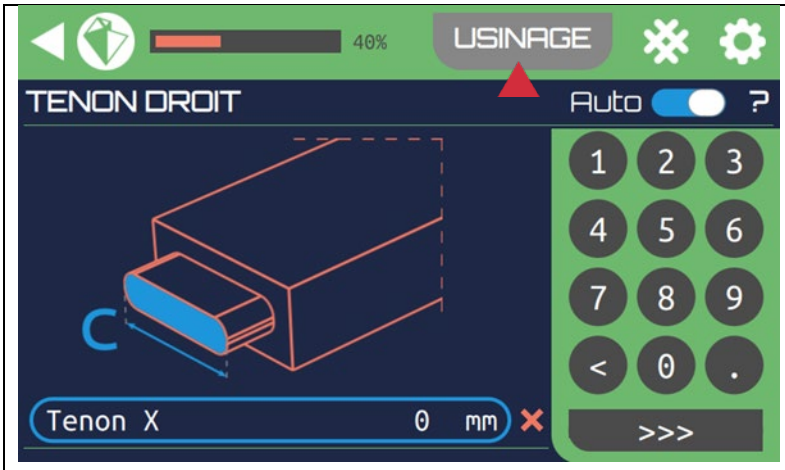	**MACHINING** STRAIGHT TENON Auto X Tenon 0 mm	

- In the header banner, you will find a # button which makes it possible to display the assistance menu for machine axes, shoulder lines and the clamping positioning.

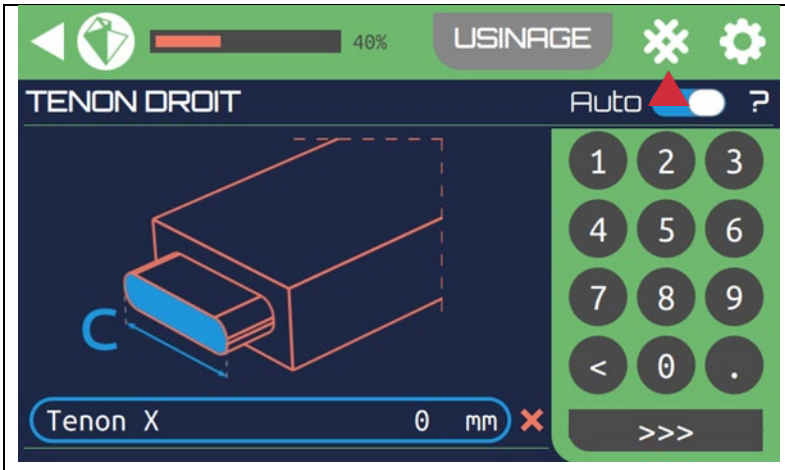	**MACHINING** STRAIGHT TENON Auto X Tenon 0 mm	

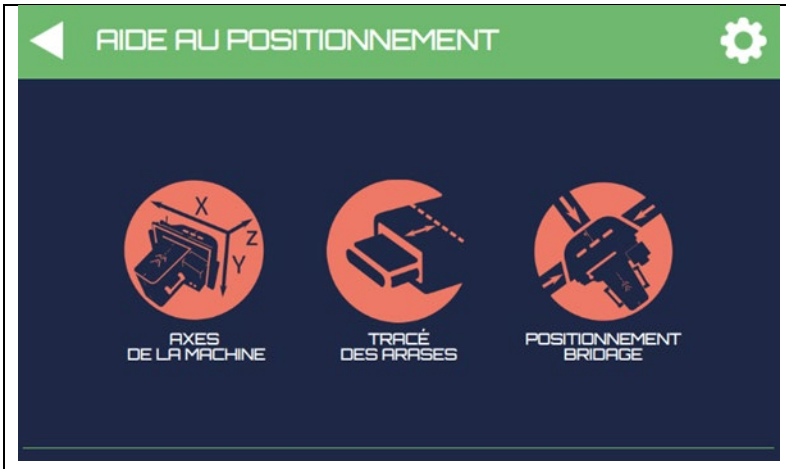

POSITIONING ASSISTANCE

MACHINE AXES – SHOULDER LINES – CLAMPING POSITIONING

4. The first parameter is the option for automatic centering; if activated, you will only be asked the dimensions of the beam and tenon. The tenon will be automatically centered on the beam. Should you wish to carry out an off-centre tenon, deselect this option.

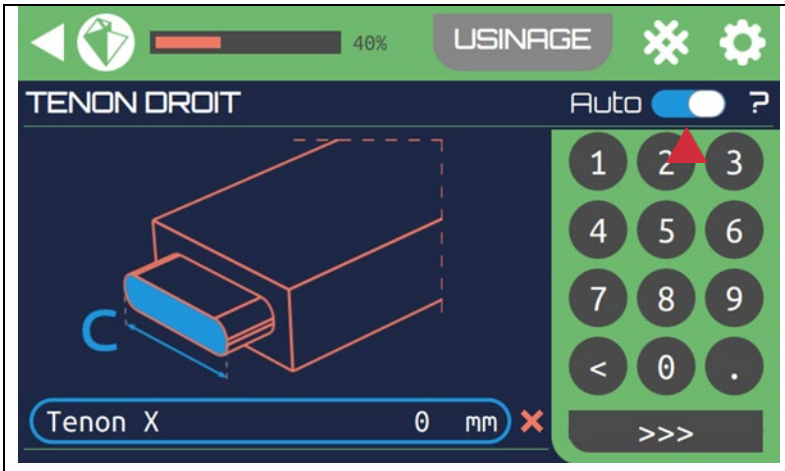

MACHINING

STRAIGHT TENON Auto

X Tenon 0 mm

5. The question mark symbol makes it possible to obtain information on the dimensions automatically managed by the programme.

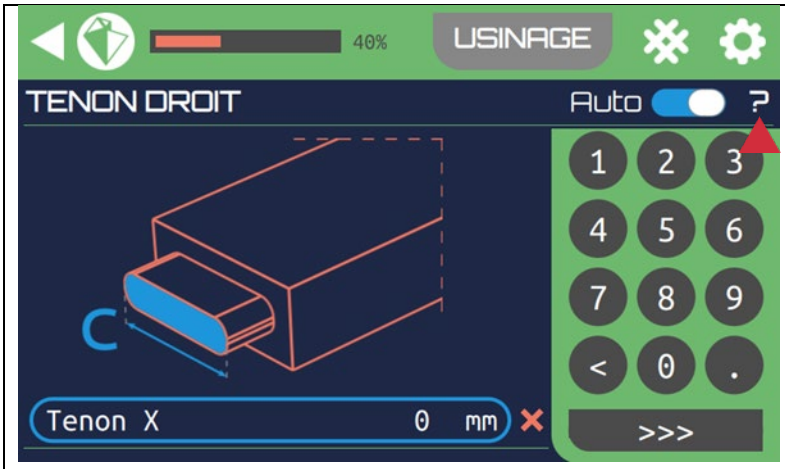	**MACHINING** STRAIGHT TENON Auto X Tenon 0 mm	
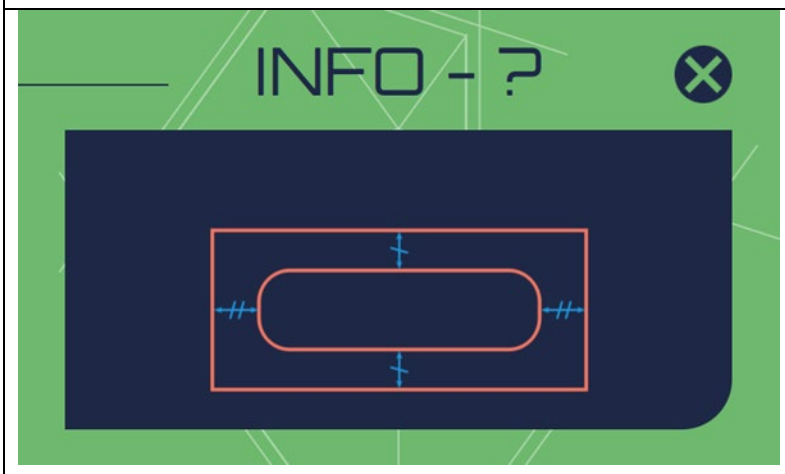	**INFORMATION - ?**	

6. The screen for entering the first parameter (X section (a)) appears with a visual description. This dimension corresponds to the largest width on the beam. Enter the value in millimetres. Then press >>.

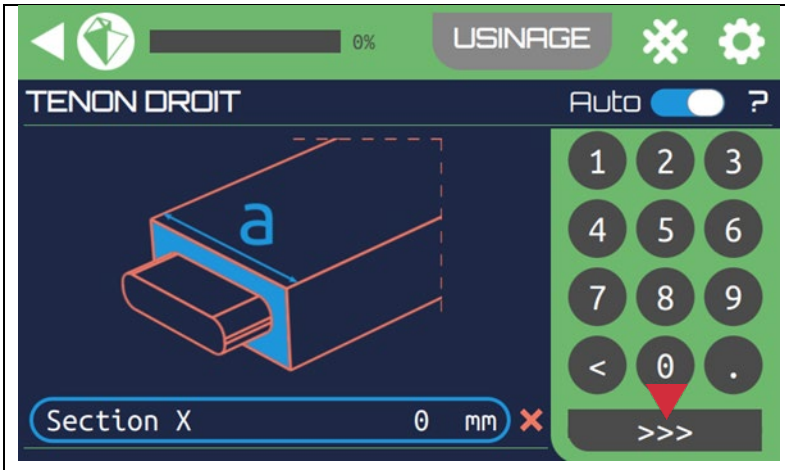	**MACHINING** STRAIGHT TENON Auto X Section 0 mm	

/!\ CAUTION/!

Any error in dimension, with respect to the actual dimensions of the beam that has to be machined may result in risks to the operator, machine and the environment, **in which case, the EPUR SAS Company shall not be held responsible.**

7. The screen for entering the 2nd parameter (Y Section (b)) appears, with a visual description. This dimension corresponds to the smallest width on the beam. Enter the value in millimetres. Then press >>.

8. The screen for entering the 3rd parameter (X Tenon (c)) appears, with a visual description. This dimension corresponds to the largest width of the tenon. Enter the value in millimetres. Then press >>.

9. The screen for entering the 4th parameter (Y Tenon (d)) appears, with a visual description. This dimension corresponds to the smallest width of the tenon. Enter the value in millimetres. Then press >>.

10. The screen for entering the 5th parameter (Z Tenon (e)) appears, with a visual description. This dimension corresponds to the length of the tenon. Enter the value in millimetres. Then press >>.

If you are in an automatic mode configuration, entering parameters is over. You can go straight to stage 13.

11. The screen for entering the 6th parameter (square shoulder (f)) appears, with a visual description. This dimension corresponds to the size of the high shoulder. Enter the value in millimetres. Then press >>.

12. The screen for entering the 7th parameter (high shoulder (g)) appears, with a visual description. This dimension corresponds to the size of the side shoulder. Enter the value in millimetres. Then press >>.

13. Entering parameters is now over. You can see in the header banner that the progress bar for entering parameters is at 100%, and that the **MACHINING** button is now active. If you wish, you can scroll your parameters using your finger in order to check before validating. Once checked, press **MACHINING**.

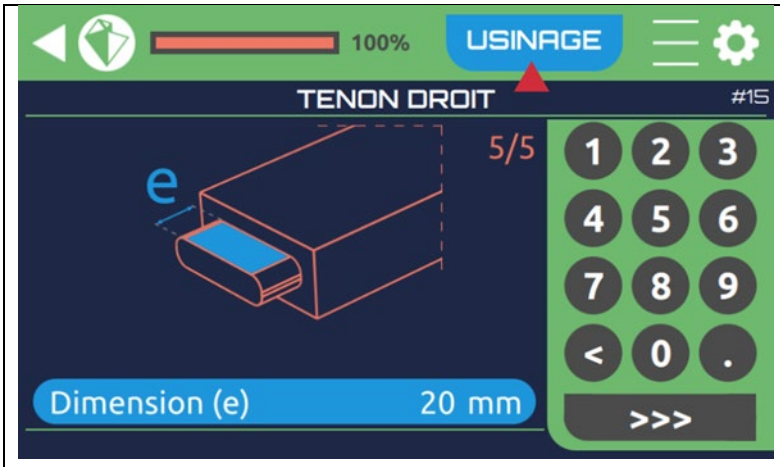	**MACHINING** STRAIGHT TENON Dimension (e) 20mm	
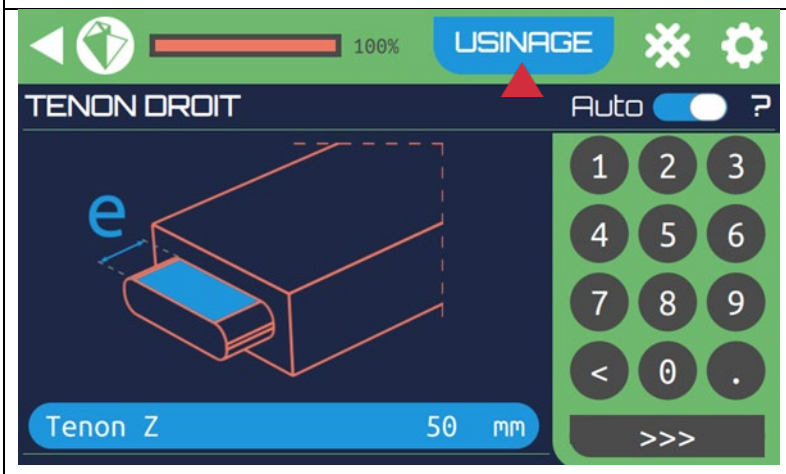	**MACHINING** STRAIGHT TENON Auto Z Tenon 50mm	

STARTING UP A MACHINING OPERATION

1. You have just accessed the **MACHINING** menu, after a few seconds the estimated time for machining will be displayed. Check that your machine is correctly installed and positioned in line with indications featured in previous chapters. You can then press on **START MACHINING**.

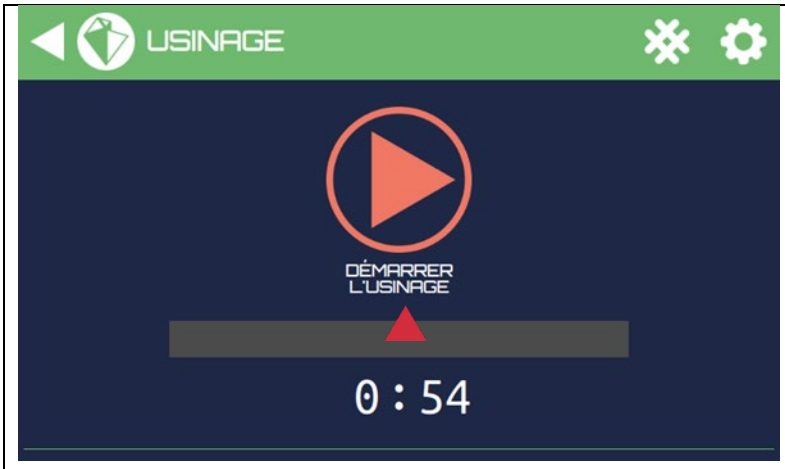	**MACHINING** START MACHINING **0:54**

2. A warning window appears to confirm that the machine is properly positioned on the clamping unit. Once validated, if the reset button has not been engaged, the programme also requests you to reset the machine. You can now validate machining start-up. If you wish to cancel, press the cross located at the top right of the window. Otherwise, if you are sure you want to start machining, actuate the milling cutter and start the machine moving, press **START MACHINING.**

	**CAUTION** **CAUTION WITH CLAMPING** Check that the machine is correctly positioned on the clamping system **OK**

Then:

	**CAUTION** **CAUTION** You're going to start machining. After validating, the machine will start moving. RESPECT ALL SAFETY RULES **START MACHINING**	

The programme asks you to validate machining start-up. If you wish to cancel, press the cross situated at the top right of the window. Otherwise, if you are sure you want to start machining, actuate the milling cutter and start the machine moving, press **START MACHINING.**

	**CAUTION** **#1 - MACHINE** You're going to start machining. After validating, the machine will start moving. RESPECT ALL SAFETY RULES **START MACHINING**	

3. The machine starts and the machining cycle begins. In case of emergency, you can hit the emergency stop button located on the dedicated remote control at any time.
4. In any situation which does not present any danger, you can halt machining by pressing the **STOP** button, which definitively stops machining without any possibility of resuming.
5. If the emergency stop button or the stop button is pressed, the machine will request the point of origin. More machining operations may only be carried out when going to the point of origin has been completed.

6. Once machining is over, the machine repositions itself in its centre and the spindle motor stops. Wait for everything, including the spindle, to stop completely before intervening on the machine.

7. At this stage, you have several options: either restart the same machining process by pressing **RESTART**, access the history of machining operations to choose to repeat one that has already been carried out by pressing **HISTORY**, or (if you have just carried out a tenon- or male dovetail-type assembly) carry out the complementary female assembly without any additional configuration by pressing the **COMPLEMENTARY ASSEMBLY** function. You may also choose to return to the main menu by pressing the **HOME** button, located at the top left of the screen in the header banner.

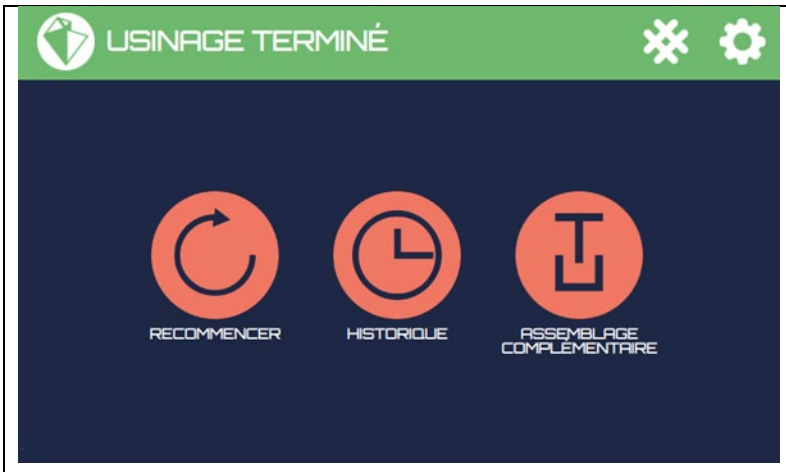	**MACHINING OVER** START AGAIN – HISTORY – COMPLEMENTARY ASSEMBLY

#10 – Extraction unit

Your OAKBOT must be connected to an extraction unit, for which a 100-mm connecting flue pipe is available on the lower part of the clamping system.

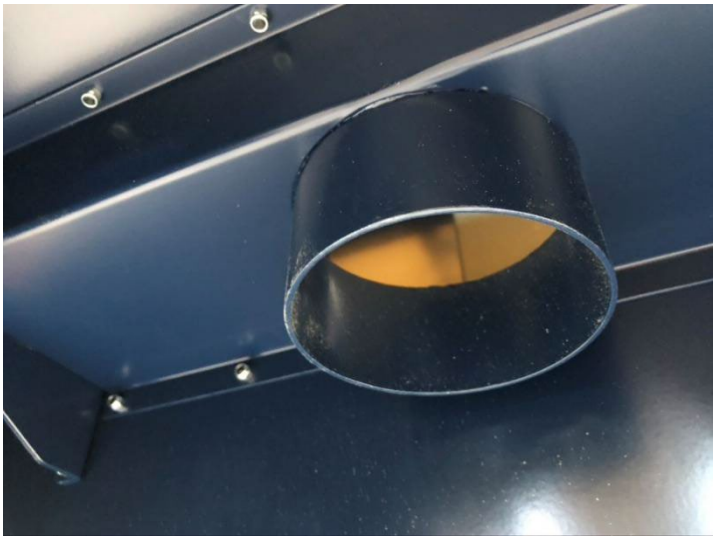

#11 - Maintenance

Regularly clear all deposits and other waste generated by machining operations. Pay particular attention to prevent wood chips from building up.

/!\ CAUTION/!

If too many wood chips build up at certain points on the machine, this may cause malfunctions for which the **EPUR SAS Company shall not be held liable.**

Do not use alcohol-based cleaning products or solvents to clean your machine.

Check permanently that your tools or tips are sharp and honed. Should this not be the case, sharpen the tool or change the tips.

/!\ CAUTION/!

Tips are sharp, and so take all precautions when handling them.

Monthly checks on the state of wear of motor brushes are recommended. To do this, see that the machine is off and power down, before removing the machine's casing.

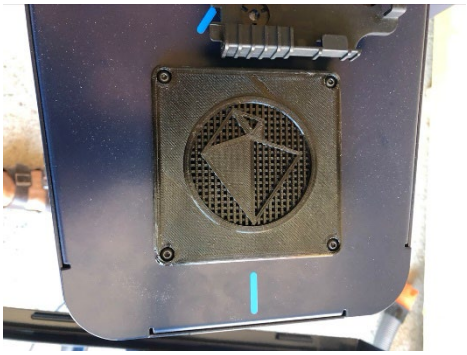

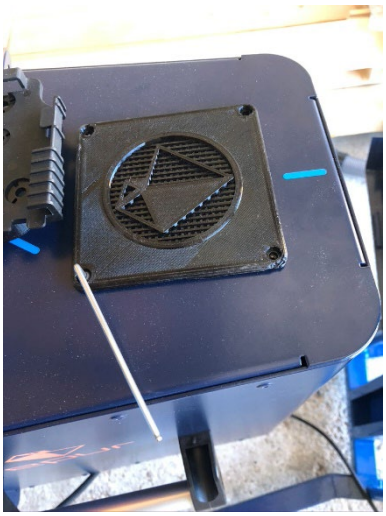

Unscrew the four assembly screws of the spindle motor switch casing.

Screws

Remove the two side covers,

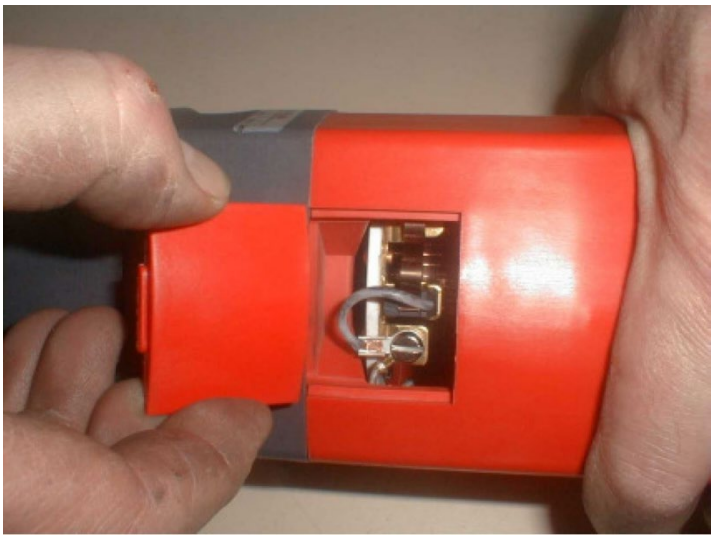

Remove the two brushes,

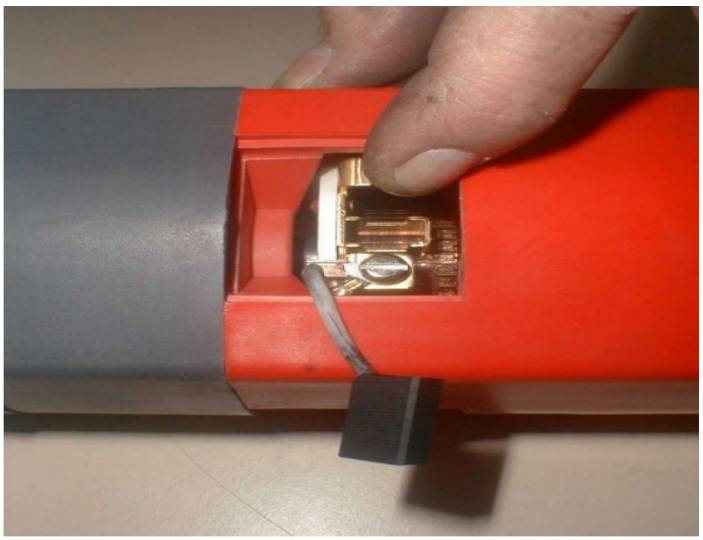

Check the state of the brushes. If there is any damage, they must be replaced, as a pair. Measure the length of each brush.

They will need to be replaced if the measurement of what is left is less than 10mm.

/!\ CAUTION /!

Operating the machine with damaged brushes may destroy the spindle motor. The Epur SAS Company shall not be held liable for any such damage. It is up to the user to be vigilant.

#12 – Safety Pictograms

RISK OF CUTTING AND RISK OF CRUSHING

/!\ CAUTION /!

Never carry out work in the machining zone when the machine is connected to mains power supply.

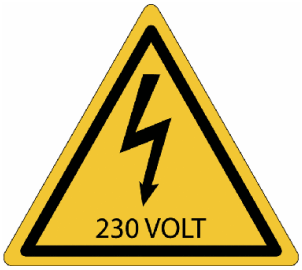

ELECTRICAL HAZARD

/!\ CAUTION /!

Never carry out work on the electrical parts of the machine when it is connected to mains power supply.

#13 – Personal Protective Equipment



/!\ CAUTION /!

For your own safety, wearing personal protective equipment is mandatory: ear defenders, protective eyewear, dust mask and safety footwear.

Warranty

EPUR products undergo very stringent factory controls. Nonetheless, if there is a breakdown, contact your dealer or EPUR SAS and give details.

Warranty period

The warranty period is one year as from the date of delivery of the product to the address specified by the purchaser.

Scope of the warranty

(1)If downtime is attributable to Epur during the abovementioned warranty period, we will repair the product, free of charge. The following cases are, however, excluded from the scope of the warranty.

- Any breakdown resulting from unsuitable conditions in the environment, handling or use other than those figuring in the instruction manual, the user's manual or in dedicated specifications drawn up between the purchaser and Epur.
- Any breakdown resulting from factors other than a fault in our product, due for example to the purchaser's equipment or his software design.
- Any breakdown resulting from modifications or repairs carried out by any person outside the EPUR staff or unauthorised repairer.
- Any breakdown that can clearly be avoided when parts are correctly maintained or replaced as described in the instruction manual, the user's manual etc…
- Any breakdown resulting from an unpredictable factor at a technical or scientific level when the product was shipped by EPUR.
- Any incident such as a fire, earthquake, flooding or other external factors, such as abnormal voltage, for which we are not responsible.

(2)The scope of the warranty is limited to what is set out in article (1) and Epur shall not assume any liability with regard to secondary prejudices (damaged equipment, operating downtime, loss of profits etc.…) or any other prejudice resulting from a defect in our product.

Conditions of application of products

Epur products are designed and manufactured as products for general use in industry and professional craft trades. Consequently, our products are not intended for domestic use or by untrained users and are not suited to such. If the purchaser consults us in advance, however, on the use of our product, understands its characteristics, nominal values and performances and engages his/her own responsibility, and if he/she takes the necessary security measures, the product may be used. In this case, the scope of the warranty shall be the same as per the above conditions.